LUMILEDS

AUTOMOTIVE

LUXEON IR Domed for Automotive Gen 2

High power infrared emitters with engineered primary optics for high efficiency and beam control

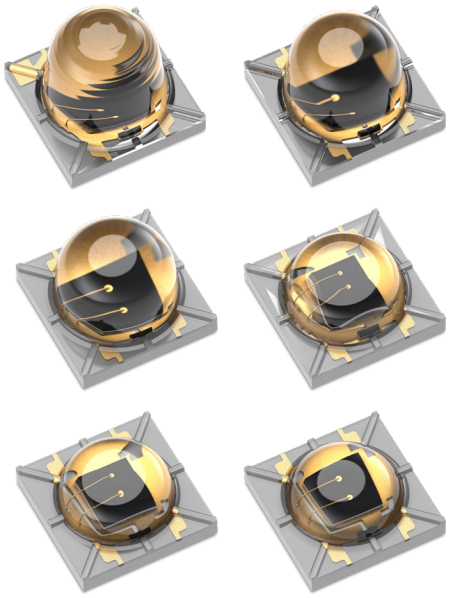

The LUXEON IR Domed Gen 2 for Automotive is a product of high power infrared emitters tailored to application needs by offering a variety of products at multiple infrared wavelengths and optical radiation patterns. Through best-in-class thermal conductivity, LUXEON IR Domed Gen 2 has excellent performance at actual operating conditions. The LUXEON IR Domed Gen 2 uses an industry standard footprint for ease of integration and upgrading existing system designs. ,

All LUXEON IR Domed Gen 2 LEDs are AEC-Q102 qualified and are designed with innovative LUXEON technology to provide industry leading performance.

FEATURES AND BENEFITS

- Available in 930 nm and 940 nm wavelengths to provide optimized performance for each type of application.
- Radiant Power: 1400 mW (930 nm) for a greater system performance.
- Six emission patterns to address diverse application needs, high punch, long range and high uniformity.
- 3.7 mm x 3.7 mm package with a 3 pad configuration that is compatible with the industry standard footprint to enable a direct upgrade in existing designs.
- Ultra-low Rth of 1.6 °C/W, the industry's best thermal conductivity, solves thermal challenges and supports space saving designs.

PRIMARY APPLICATIONS

- Driver Monitoring Systems
- Biometric Identification
- Exterior Sensing Applications
- Interior Presence Detection

RoHS COMPLIANT

 ©2021 Lumileds Holding B.V. All rights reserved.

Table of Contents

General Product Information . . . 2
- Product Test Conditions . . . 2
- Part Number Nomenclature . . . 2
- Radiometric Power Maintenance . . . 2
- Environmental Compliance . . . 2

Performance Characteristics . . . 3
- Product Selection Guide . . . 3
- Optical Characteristics . . . 3
- Thermal Characteristics . . . 3
- Electrical Characteristics . . . 4
- Absolute Ratings . . . 4

Characteristic Curves . . . 5
- Spectral Power Distribution Characteristics . . . 5
- Light Output Characteristics . . . 5
- Electrical Characteristics . . . 6
- Wavelength Shift Characteristics . . . 7
- Radiation Pattern Characteristics . . . 8
- Operating Limit Characteristics . . . 9
- Permissible Pulse Handling Characteristics . . . 9

Product Bin and Labeling Definitions . . . 10
- Decoding Product Bin Labeling . . . 10
- Radiometric Power Bins . . . 10
- Peak Wavelength Bins . . . 11
- Forward Voltage Bins . . . 11

Mechanical Dimensions . . . 12

Package Weight . . . 13

Packaging Information . . . 14
- Pocket Tape Dimensions . . . 14
- Reel Dimensions . . . 16
- Product Labeling . . . 17

 ©2021 Lumileds Holding B.V. All rights reserved.

General Product Information

LUXEON IR Domed for Automotive Gen 2 LEDs are infrared emitters consisting of dual-junction high intensity near infrared chips mounted on a ceramic substrate. The products have primary optics designed to deliver a variety of radiation patterns. All LUXEON IR LEDs contain a TVS chip for ESD protection.

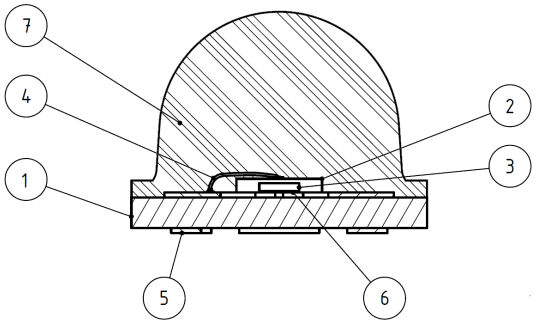

1) Ceramic substrate
2) Infrared high-power die
3) TVS chip
4) Wirebonds
5) Solder pads
6) Metallization layer
7) Silicone dome

Figure 1. Schematic cross section LUXEON IR Domed Gen 2

Product Test Conditions

LUXEON IR Domed Gen 2 emitters are tested and binned with a 20 ms monopulse of 1A at a junction temperature, T_j, of 25 °C.

Part Number Nomenclature

Part numbers for LUXEON IR Domed Gen 2 follow the convention below:

L 1 I 0 – **A B B B C C C** 0 2 0 0 0 0

Where:

B B B	–	designates nominal peak wavelength
C C C	–	designates emitter's radiation pattern design
0 2	–	designates 2nd generation
0 0 0 0	–	reserved for further customization

Therefore, the following part number is used for a LUXEON IR Domed Gen 2 emitter with a peak wavelength of 930 nm and a beam angle of ~90°:

L 1 I 0 – **A 9 3 0 0 9 0** 0 2 0 0 0 0

Radiometric Power Maintenance

Please contact your local Sales Representative or Lumileds Business Development Manager for more information about the long-term performance of this product.

Environmental Compliance

Lumileds LLC is committed to providing environmentally friendly products to the solid-state lighting market. LUXEON IR Domed Gen 2 is compliant to the European Union directives on the restriction of hazardous substances in electronic equipment, namely the RoHS Directive 2011/65/EU and REACH Regulation (EC) 1907/2006. Lumileds LLC will not intentionally add the following restricted materials to its products: lead, mercury, cadmium, hexavalent chromium, polybrominated biphenyls (PBB) or polybrominated diphenyl ethers (PBDE).

 ©2021 Lumileds Holding B.V. All rights reserved.

Performance Characteristics

Product Selection Guide

LUXEON IR Domed Gen 2 emitters are tested and binned with a 20 ms monopulse of 1A at a junction temperature, T_j, of 25 °C.

Table 1. Typical product performance and optical characteristics of LUXEON IR Domed Gen 2 at 1000 mA, T_j = 25 °C

PEAK WAVELENGTH [1] (nm)	TYPICAL FWHM BEAM ANGLE [3] (°)	RADIOMETRIC POWER [2] (mW)		TYPICAL RADIANT INTENSITY[4] (mW/sr)	PART NUMBER
		MINIMUM	TYPICAL[4]		
927	136[5]	1300	1400	255	L1I0-A930135020000
927	146[5]	1300	1400	310	L1I0-A930145020000
927	139	1300	1400	340	L1I0-A930150020000
945	45	1200	1375	1265	L1I0-A940050020000
945	61	1200	1375	1130	L1I0-A940060020000
945	90	1200	1375	740	L1I0-A940090020000
945	136[5]	1200	1375	250	L1I0-A940135020000
945	146[5]	1200	1375	305	L1I0-A940145020000
945	139	1200	1375	330	L1I0-A940150020000

Notes for Table 1:
1. Lumileds maintains a tolerance of ±2 nm on peak wavelength measurements.
2. Lumileds maintains a tolerance of ±7% on radiometric power measurements.
3. FWHM denotes the viewing angle off-axis angle from the LED centerwhere the luminous intensity is ½ of the peak value.
4. Typical performance represents the average long term performance and may not be reflected in individual batches.
5. Full Width Half Center

Optical Characteristics

Table 2. Optical characteristics for LUXEON IR Domed Gen 2 at 1000 mA, T_j = 25 °C

PART NUMBER	PEAK WAVELENGTH (NM)[1,2]			TYPICAL SPECTRUM FWHM (nm)
	MINIMUM	TYPICAL	MAXIMUM	
L1I0-A930xxx020000	920	930	940	29
L1I0-A940xxx020000	935	950	960	36

Notes for Table 2:
1. Lumileds maintains a tolerance of ±2nm on peak wavelength measurements.
2. Typical performance represents the average long term performance and may not be reflected in individual batches

Thermal Characteristics

Table 3. Thermal characteristics for LUXEON IR Domed Gen 2 at 1000 mA, T_j = 25 °C

PART NUMBER	THERMAL RESISTANCE JUNCTION-TO-CASE (K/W)				TYPICAL TEMPERATURE COEFFICIENT OF PEAK WAVELENGTH [3,4] (nm/°C)
	$R\Theta_{J\text{-}C}$ el [1,4]		$R\Theta_{J\text{-}C}$ real [2,4]		
	TYPICAL	MAXIMUM	TYPICAL	MAXIMUM	
L1I0-A9xxxxx020000	1.6	2.0	3.2	3.8	0.29

Notes for Table 3:
1. Ratio between temperature difference (junction « case) and electrical input power (references JESD51-51, JESD51-14).
2. Ratio between temperature difference (junction « case) and dissipated heat, i.e. emitted light taken into account (references JESD51-51, JESD51-14).
3. Measured between 25°C and 85°C.
4. Typical performance represents the average long term performance and may not be reflected in individual batches

 ©2021 Lumileds Holding B.V. All rights reserved.

Electrical Characteristics

Table 4. Electrical characteristics for LUXEON IR Domed Gen 2 at 1000 mA, T_j = 25 °C

PART NUMBER	FORWARD VOLTAGE (V_f) [1,3]			TYPICAL TEMPERATURE COEFFICIENT OF FORWARD VOLTAGE [2] (mV/°C)	RISE TIME (at 5A, ns)	FALL TIME (at 5A, ns)
	MINIMUM	TYPICAL	MAXIMUM			
L1I0-A9xxxxx020000	2.5	2.9	3.5	-1.50	9.9	14.5

Notes for Table 4:
1. Lumileds maintains a tolerance of ±1% on forward voltage measurements.
2. Measured between 25°C and 85°C.
3. Typical performance represents the average long term performance and may not be reflected in individual batches

Absolute Ratings

Table 5. Absolute ratings for LUXEON IR Domed Gen 2

PARAMETER	MAXIMUM PERFORMANCE
Minimum DC Forward Current [1, 2]	50 mA
Maximum DC Forward Current [1, 2]	1500 mA
Maximum Peak Pulsed Forward Current [1, 3]	5000 mA
Maximum Emitter Junction Temperature [1] (DC & Pulse)	145 °C
ESD Sensitivity (ANSI/ESDA/JEDEC JS-001-2012)	Class 3B
Operating Case Temperature [1]	-40 °C to 125 °C
Emitter Storage Temperature	-40 °C to 125 °C
SMD Process Classification Temperature	260 °C per JEDEC J-STD-020E
Allowable Reflow Cycles	3
Reverse Voltage ($V_{reverse}$)	LUXEON IR LEDs are not designed to be driven in reverse bias

Notes for Table 5:
1. Proper current derating must be observed to maintain junction temperature below the maximum allowable temperature. LUXEON IR Domed for Automotive LEDs driven above maximum LED case temperature may have shorter lifetime.
2. Please consult with Lumileds for more information on maximum time durations and forward currents for these temperatures.
3. For pulse handling capability details see Figure 11.

 ©2021 Lumileds Holding B.V. All rights reserved.

Characteristic Curves

Spectral Power Distribution Characteristics

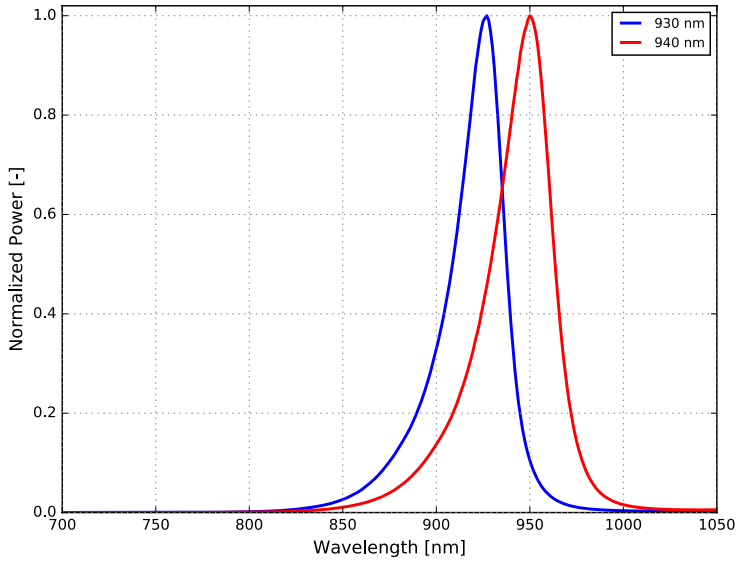

Figure 2. Typical normalized power vs. wavelength for LUXEON IR Domed Gen 2 at 1000 mA, T_j = 25 °C

Light Output Characteristics

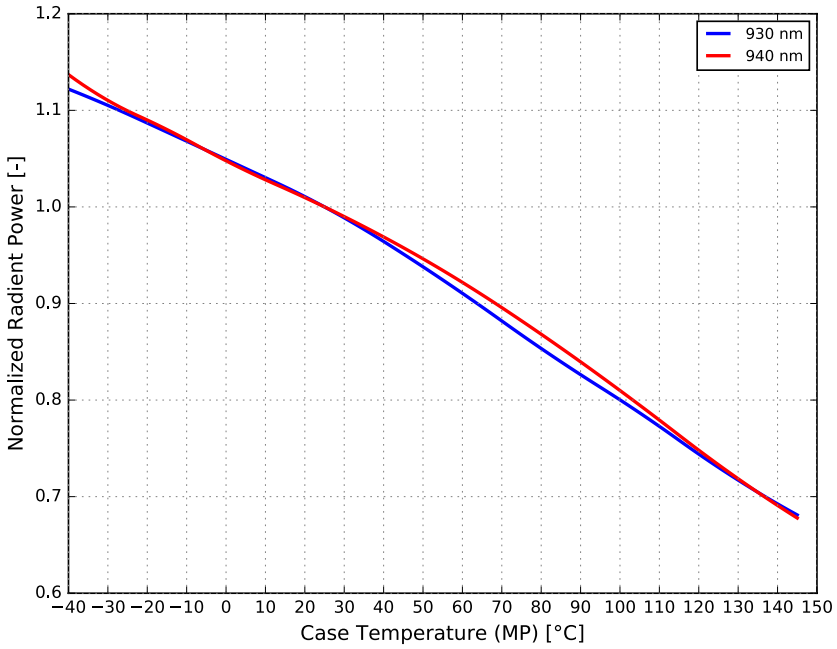

Figure 3. Typical radiant power vs. case temperature for LUXEON IR Domed Gen 2 at 1000 mA

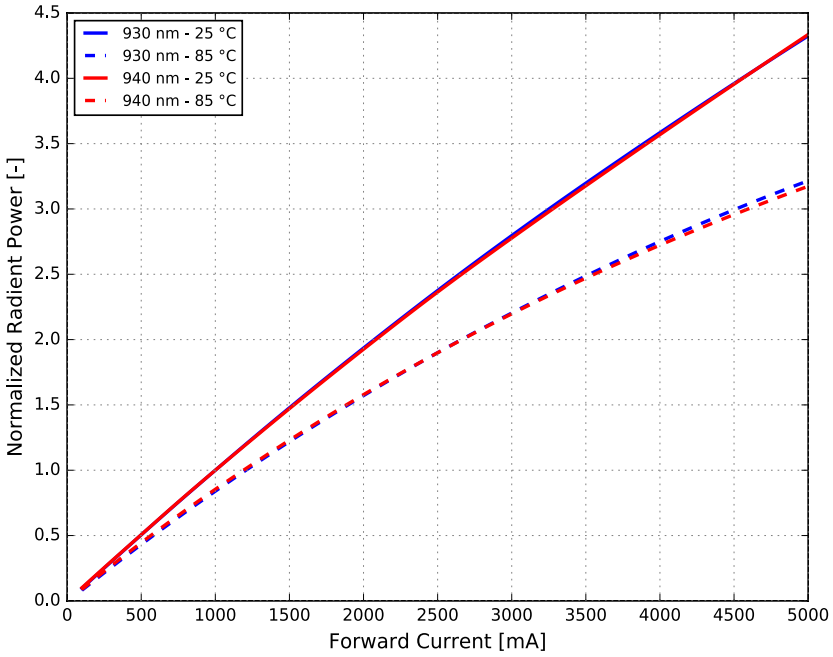

Figure 4. Typical normalized radiant power vs. forward current for LUXEON IR Domed Gen 2 T_j = 25 °C and 85 °C

Electrical Characteristics

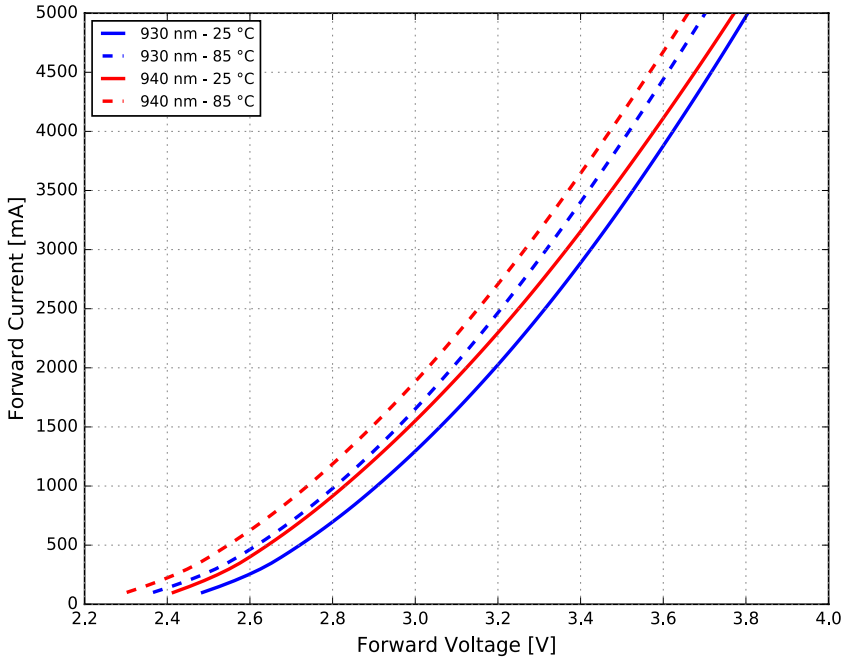

Figure 5. Typical forward current vs. forward voltage for LUXEON IR Domed Gen 2 at T_j = 25 °C

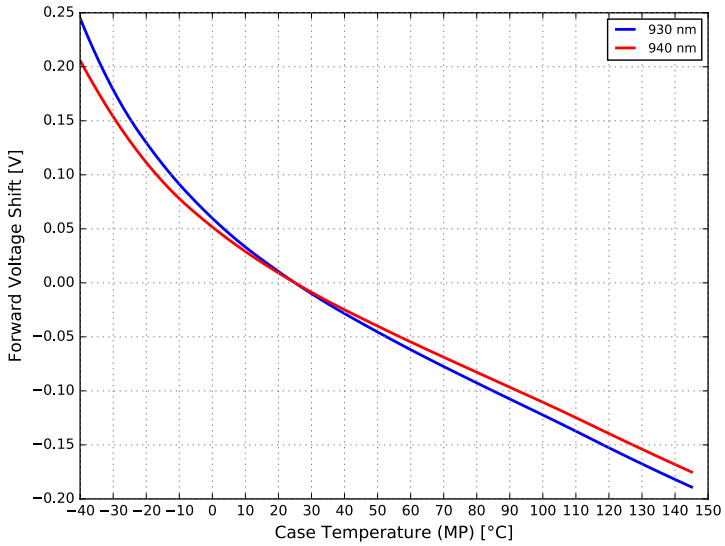

Figure 6. Typical forward voltage shift vs. case temperature for LUXEON IR Domed Gen 2 at 1000 mA

Wavelength Shift Characteristics

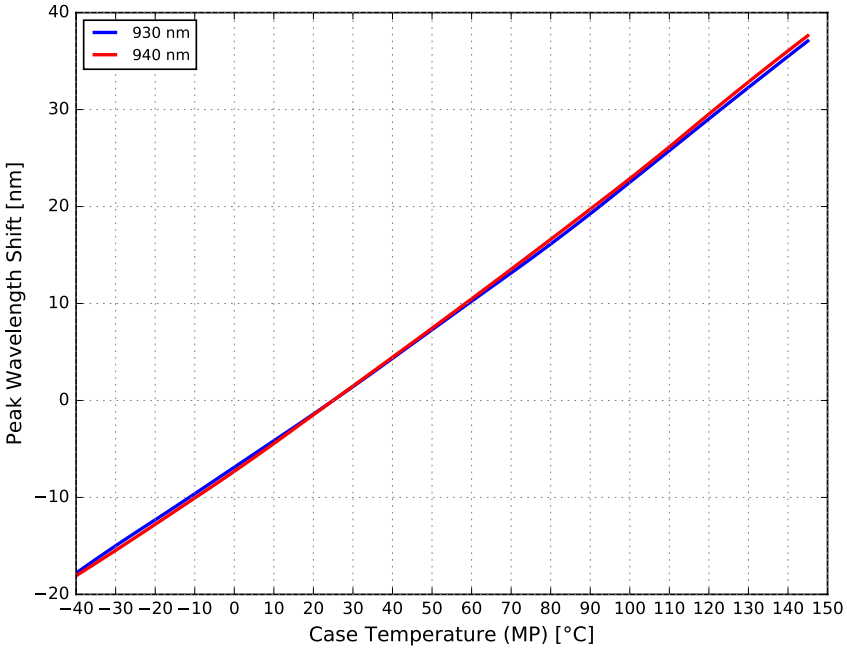

Figure 7. Typical peak wavelength shift vs. case temperature for LUXEON IR Domed Gen 2 at 1000 mA

 ©2021 Lumileds Holding B.V. All rights reserved.

Radiation Pattern Characteristics

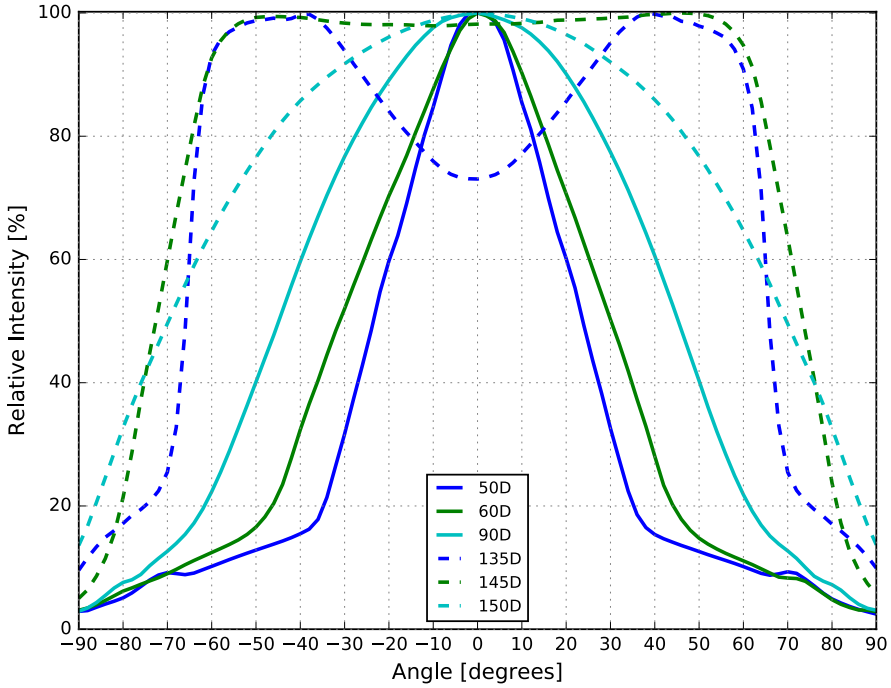

Figure 8. Typical radiation pattern for LUXEON IR Domed Gen 2 at 1000 mA, T_j = 25 °C

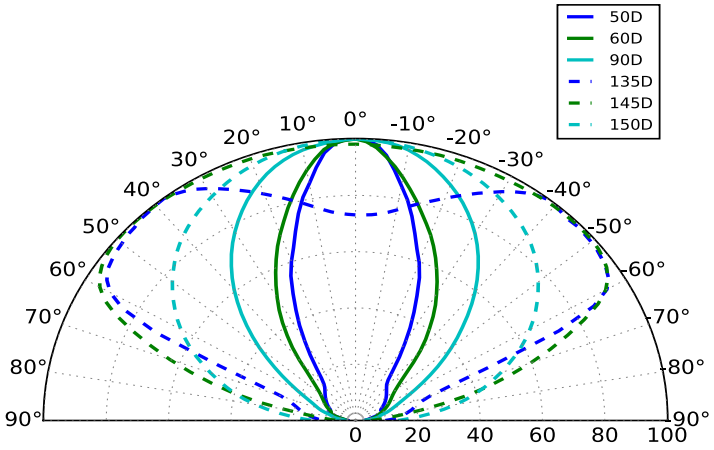

Figure 9. Typical polar radiation pattern (Intensity %) for LUXEON IR Domed Gen 2 at 1000 mA, T_j = 25 °C

 ©2021 Lumileds Holding B.V. All rights reserved.

Operating Limit Characteristics

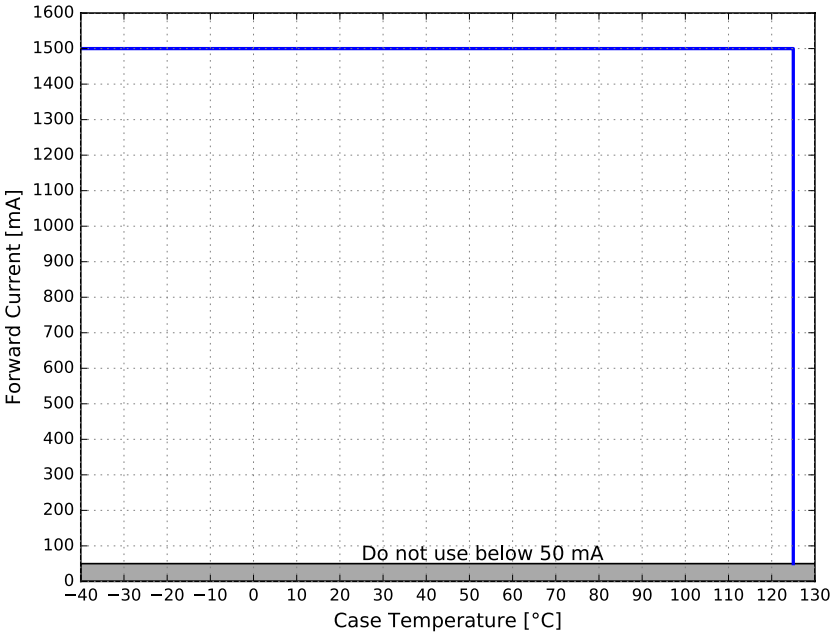

Figure 10. Maximum forward current vs. case temperature for LUXEON IR Domed Gen 2

Permissible Pulse Handling Characteristics

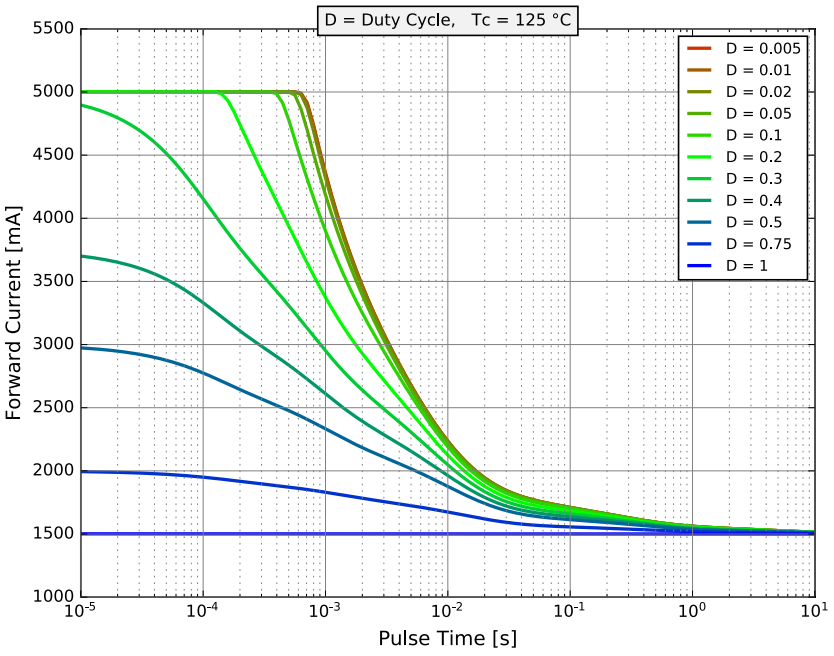

Figure 11. Permissible pulse handling capability for LUXEON IR Domed Gen 2 at T_c = up to 125 °C

Notes for Figure 11:
1. Data available in other parametrization available upon request.

Product Bin and Labeling Definitions

Decoding Product Bin Labeling

In the manufacturing of semiconductor products, there are variations in performance around the average values given in the technical datasheet. For this reason, Lumileds bins components for luminous flux or radiometric power, color point, peak or dominant wavelength and forward voltage.

LUXEON IR Domed Gen 2 emitters are labeled using a 4-digit alphanumeric CAT code following the format below:

A B C D

Where:

A – designates radiometric power bin (example: N = 1200 to 1300 mW)

B C – designates peak wavelength bin (example: 9H = 935 nm to 940 nm)

D – designates forward voltage bin (example: D = 2.5 to 3.0 V)

Therefore, a LUXEON IR Domed emitter with a radiometric power range of 1200 to 1300 mW, peak wavelength range of 935 to 940 nm and a forward voltage range of 2.5 to 3.0 V has the following CAT code:

N 9 H D

Radiometric Power Bins

Table 7 lists the standard radiometric power bins for LUXEON IR Domed Gen 2 emitters. Although several bins are outd, product availability in a particular bin varies by production run and by product performance. Not all bins are available in all proliferations.

Table 7. Radiometric power bin definitions for LUXEON IR Domed Gen 2 at 1 A, T_j = 25 °C

BIN	RADIOMETRIC POWER [1] (mW)	
	MINIMUM	MAXIMUM
N	1200	1300
P	1300	1400
Q	1400	1500
R	1500	1600

Notes for Table 7:
1. Lumileds maintains a tolerance of ±7% on radiometric power measurements.

 ©2021 Lumileds Holding B.V. All rights reserved.

Peak Wavelength Bins

Table 8 lists the standard peak wavelength bins for LUXEON IR Domed Gen 2 emitters. Although several bins are outd, product availability in a particular bin varies by production run and by product performance. Not all bins are available in all proliferations.

Table 8. Peak wavelength bin definitions for LUXEON IR Domed Gen 2 at 1 A, T_j = 25 °C

BIN	PEAK WAVELENGTH [1] (nm)	
	MINIMUM	MAXIMUM
9E	920	925
9F	925	930
9G	930	935
9H	935	940
9J	940	945
9K	945	950
9L	950	955
9M	955	960

Notes for Table 8:
1. Lumileds maintains a tolerance of ±2nm on peak wavelength measurements.

Forward Voltage Bins

Table 9 lists the standard forward voltage bins for LUXEON IR Domed Gen 2 emitters. Although several bins are outd, product availability in a particular bin varies by production run and by product performance. Not all bins are available in all proliferations.

Table 9. Forward voltage bin definitions for LUXEON IR Domed Gen 2 at 1 A, T_j = 25 °C

BIN	FORWARD VOLTAGE [1] (V_f)	
	MINIMUM	MAXIMUM
D	2.5	3.0
E	3.0	3.5

Notes for Table 9:
1. Lumileds maintains a tolerance of ±1% on forward voltage measurements.

 ©2021 Lumileds Holding B.V. All rights reserved.

Mechanical Dimensions

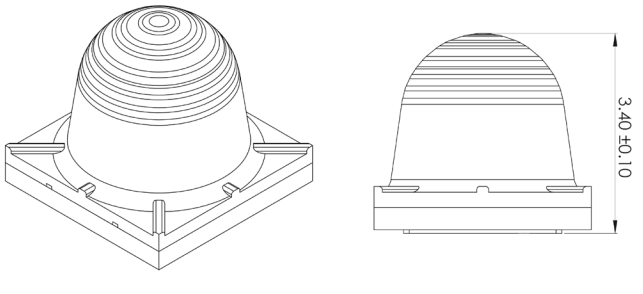

L1I0-Axxx050020000

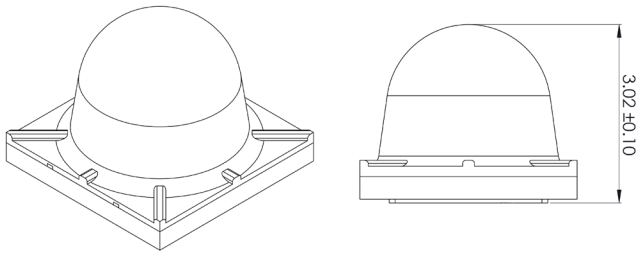

L1I0-Axxx060020000

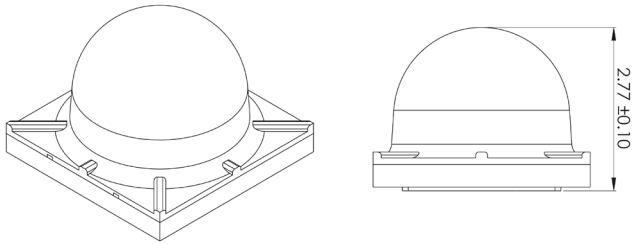

L1I0-Axxx090020000

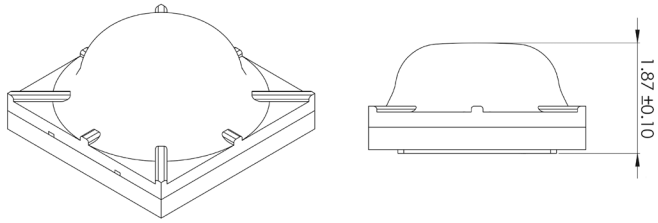

L1I0-Axxx135020000

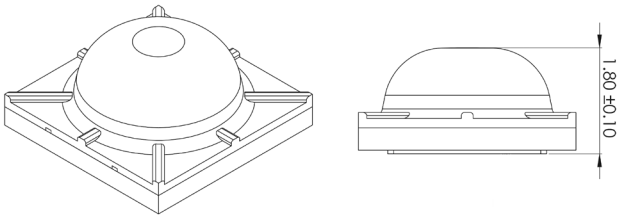

L1I0-Axxx145020000

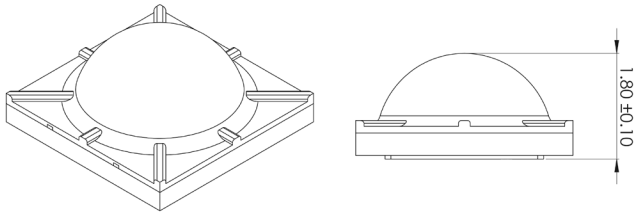

L1I0-Axxx150020000

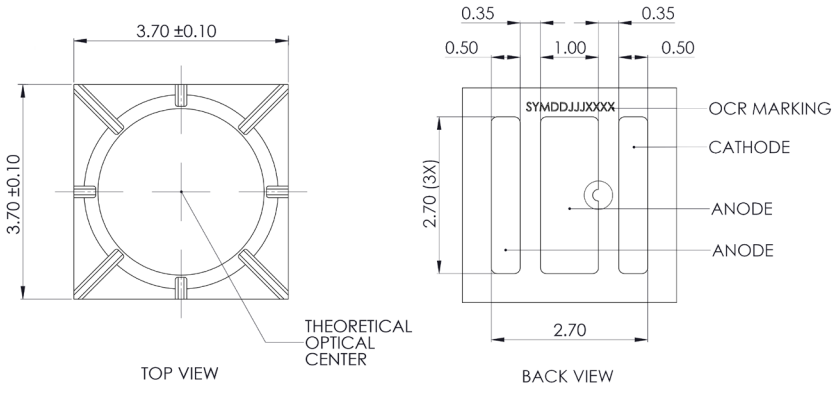

Figure 12. Mechanical Dimensions for LUXEON IR Domed Gen 2

Notes for Figure 12:
1. Drawings are not to scale.
2. All dimensions are in millimeters.

Package Weight

Table 10. Approximate weight of LUXEON IR Domed Gen 2

PART NUMBER	PACKAGE WEIGHT [MG]
L1I0-A940050020000	46.3
L1I0-A940060020000	40.2
L1I0-A940090020000	38.7
L1I0-Axxx135020000	32.5
L1I0-Axxx145020000	31.6
L1I0-Axxx150020000	30.7

Electrical Internal Circuit

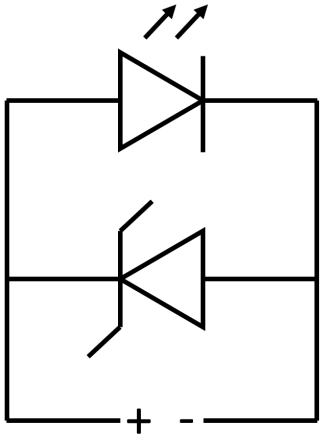

Figure 13. Electrical Internal Circuit for LUXEON IR Domed Gen 2

JEDEC Moisture Sensitivity

Table 11. Moisture sensitivity levels for LUXEON IR Domed Gen 2

LEVEL	LEAD-FREE ASSEMBLY		SOAK REQUIREMENTS STANDARD	
	TIME	CONDITIONS	TIME	CONDITIONS
1	Unlimited	≤30 °C / 85 % RH	168 Hours +5 / -0	85 °C / 85 % RH

 ©2021 Lumileds Holding B.V. All rights reserved.

Packaging Information

Pocket Tape Dimensions

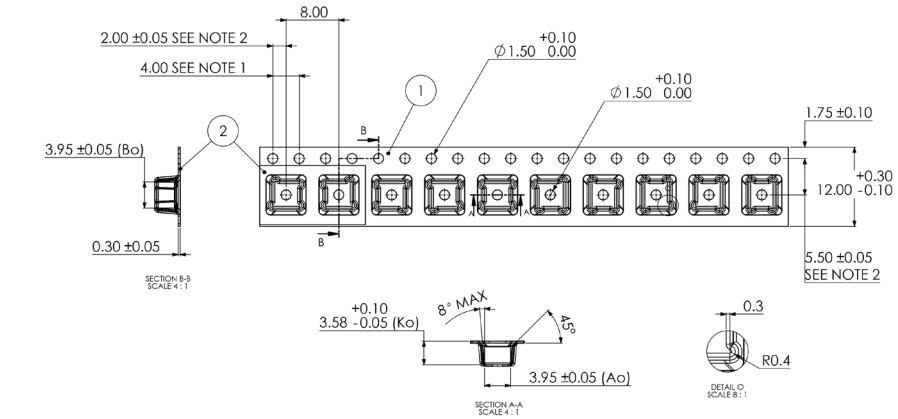

① Carrier tape

② Cover tape, thickness 0.05

NOTES:
1. 10 SPROCKET HOLE PITCH CUMULATIVE TOLERANCE ±0.2
2. POCKET POSITION RELATIVE TO SPROCKET HOLE MEASURED AS TRUE POSITION OF POCKET, NOT POCKET HOLE.
3. Ao AND Bo ARE MEASURED ON A PLANE AT A DISTANCE "R" ABOVE THE BOTTOM OF THE POCKET.

Figure 14a. Pocket tape dimensions for L1I0-Axxx050020000

Notes for Figure 14a:
1. Drawings are not to scale.
2. All dimensions are in millimeters.

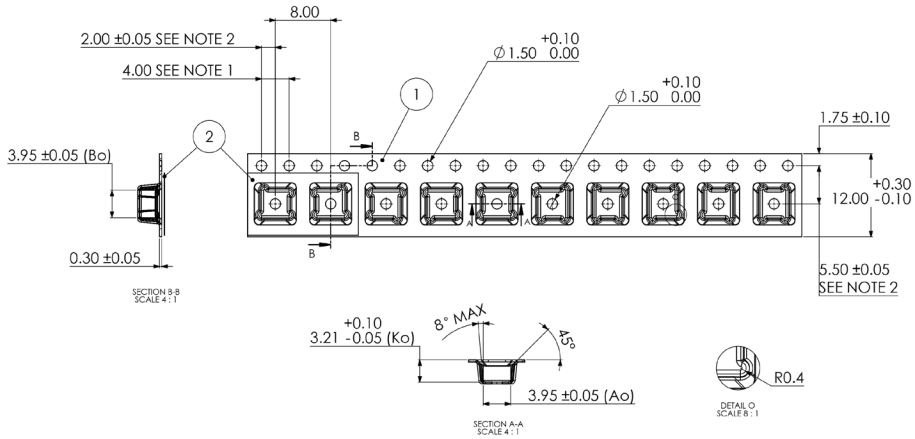

① Carrier tape

② Cover tape, thickness 0.05

NOTES:
1. 10 SPROCKET HOLE PITCH CUMULATIVE TOLERANCE ±0.2
2. POCKET POSITION RELATIVE TO SPROCKET HOLE MEASURED AS TRUE POSITION OF POCKET, NOT POCKET HOLE.
3. Ao AND Bo ARE MEASURED ON A PLANE AT A DISTANCE "R" ABOVE THE BOTTOM OF THE POCKET.

Figure 14b. Pocket tape dimensions for L1I0-Axxx060020000

Notes for Figure 14b:
1. Drawings are not to scale.
2. All dimensions are in millimeters.

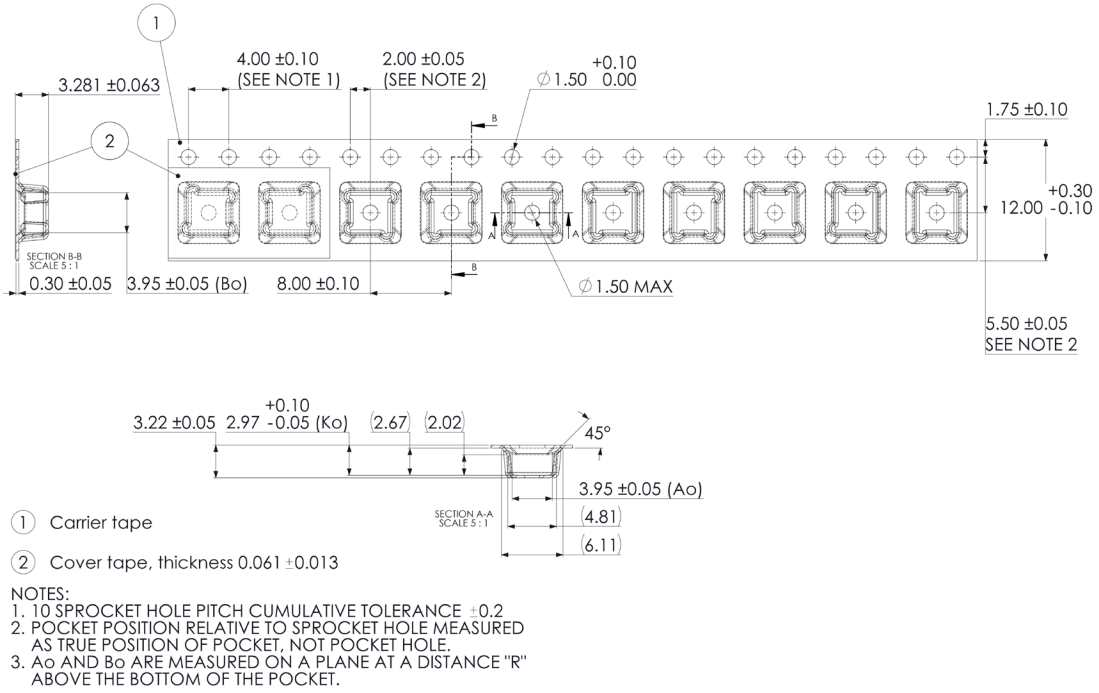

Figure 14c. Pocket tape dimensions for L1I0-Axxx090020000

Notes for Figure 14c:
1. Drawings are not to scale.
2. All dimensions are in millimeters.

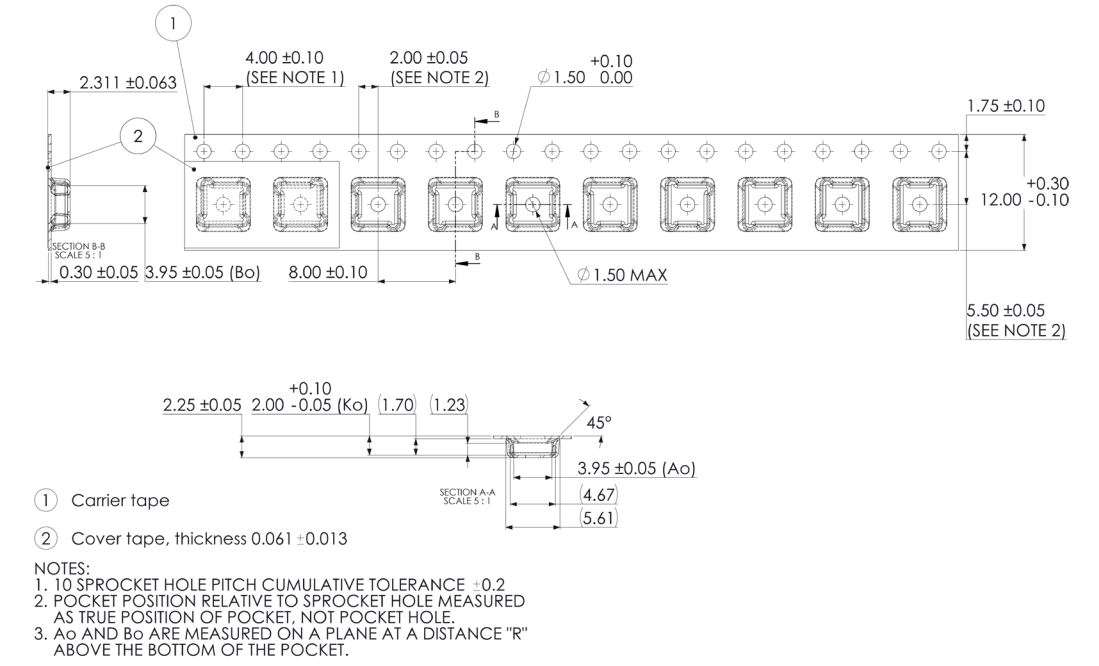

Figure 14d. Pocket tape dimensions for L1I0-Axxx145020000 and L1I0-Axxx150000000

Notes for Figure 14d:
1. Drawings are not to scale.
2. All dimensions are in millimeters.

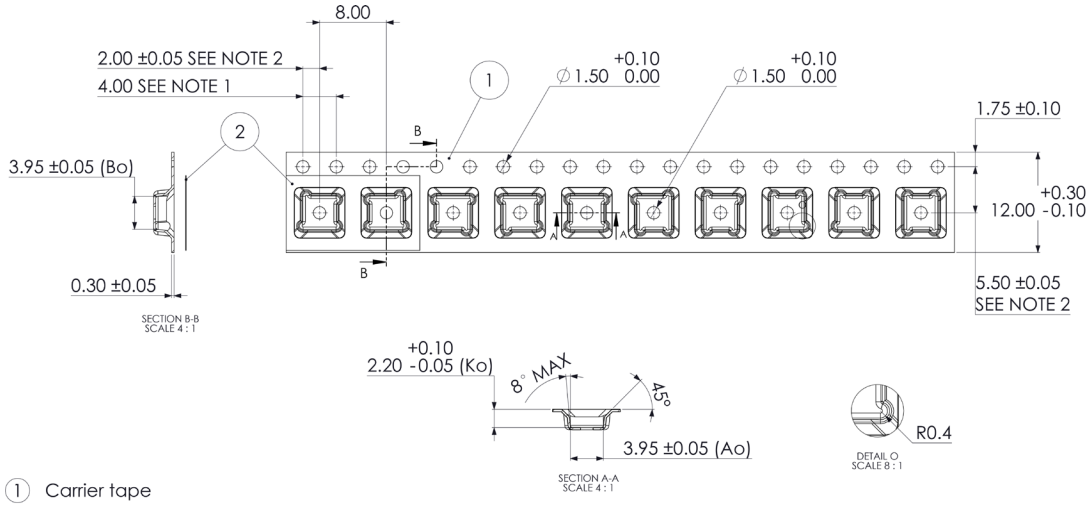

(1) Carrier tape

(2) Cover tape, thickness 0.05

NOTES:
1. 10 SPROCKET HOLE PITCH CUMULATIVE TOLERANCE ±0.2
2. POCKET POSITION RELATIVE TO SPROCKET HOLE MEASURED AS TRUE POSITION OF POCKET, NOT POCKET HOLE.
3. Ao AND Bo ARE MEASURED ON A PLANE AT A DISTANCE "R" ABOVE THE BOTTOM OF THE POCKET.
4. REFER TO BCA642-A FOR ORIGINAL POCKET TAPE CAD FILE FROM VENDOR.

Figure 14e. Pocket tape dimensions for L1I0-AXXX135020000

Reel Dimensions

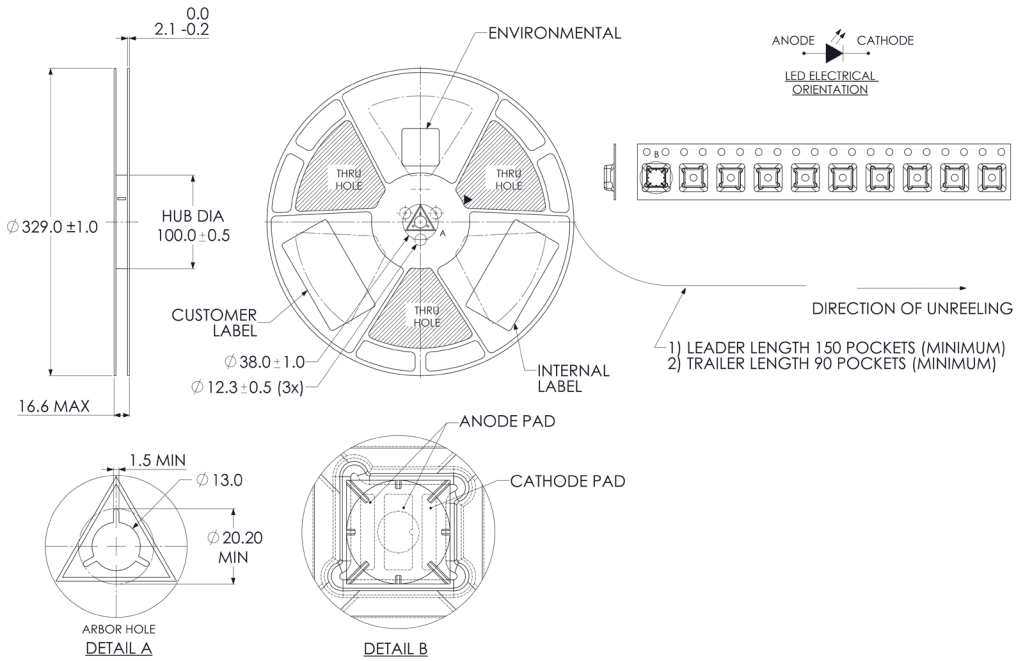

Figure 15. Reel dimensions for LUXEON IR Domed Gen 2

Notes for Figure 15:
1. Drawings are not to scale.
2. All dimensions are in millimeters.

Product Labeling

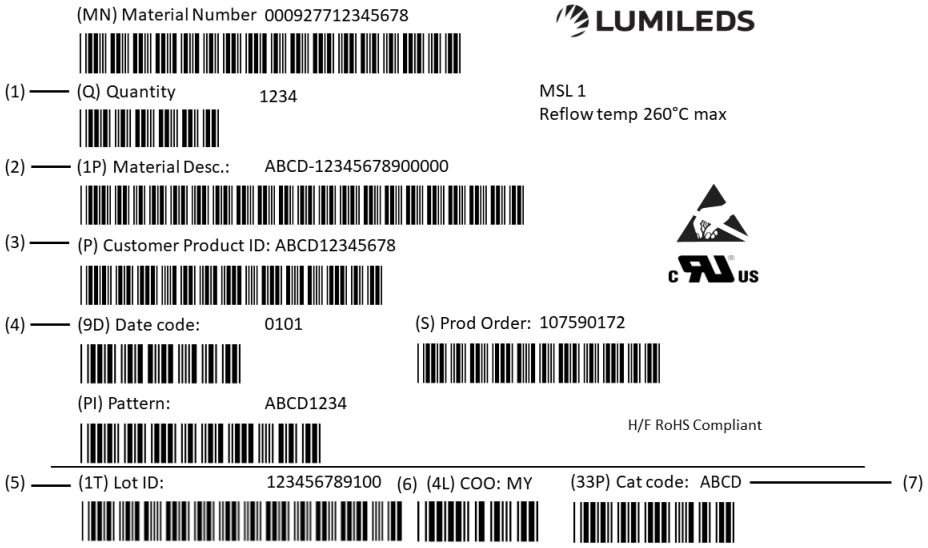

Figure 16. Example of a reel label LUXEON IR Domed Gen 2

Notes for Figure 16: - Reel label descriptions for customer use:
Field labels not described are for Lumileds internal use only.

1. Total number of LED emitters in a shipment box.
2. Lumileds part number
3. Customer part number for custom requests only.
4. LED test date in YYWW format.
5. Unique product lot identification number. This number is required for traceability purposes.
6. Country code of origin of manufacturing of part (e.g. MY for Malaysia, CN for China) according to ISO 3166-1 alpha-2 document.
7. Product bin 4-digit alphanumeric CAT code.

 ©2021 Lumileds Holding B.V. All rights reserved.

About Lumileds

Lumileds is a global leader in LED and microLED technology, innovation, and solutions for the automotive, display, illumination, mobile, and other markets where light sources are essential. Our approximately 3,500 employees operate in over 15 countries and partner with our customers to deliver never before possible solutions for lighting, safety, and well-being.

To learn more about our lighting solutions, visit lumileds.com.

©2021 Lumileds Holding B.V. All rights reserved.
LUXEON is a registered trademark of the Lumileds Holding B.V. in the United States and other countries.

lumileds.com

Neither Lumileds Holding B.V. nor its affiliates shall be liable for any kind of loss of data or any other damages, direct, indirect or consequential, resulting from the use of the provided information and data. Although Lumileds Holding B.V. and/or its affiliates have attempted to provide the most accurate information and data, the materials and services information and data are provided "as is," and neither Lumileds Holding B.V. nor its affiliates warrants or guarantees the contents and correctness of the provided information and data. Lumileds Holding B.V. and its affiliates reserve the right to make changes without notice. You as user agree to this disclaimer and user agreement with the download or use of the provided materials, information and data. A listing of Lumileds product/patent coverage may be accessed at lumileds.com/patents.