LUXEON SunPlus 5050

High efficacy and superior robustness in a high power package, enabling cost-effective system design

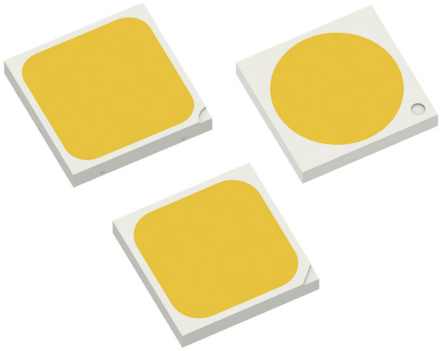

LUXEON SunPlus 5050 is a high power robust LEDs using an industry-standard 5050 surface mount package with a small Light Emitting Surface (LES). LUXEON SunPlus 5050 delivers top-rated µmol/J and PPF (µmol/s) performance and long lifetime with CCTs ranging from 2200K to 6500K and CRIs of 70, 80, and 90. It offers hot-color targeting to ensure that the LEDs are within color target at application conditions of 85°C.

FEATURES AND BENEFITS
Top-rated µmol/J and PPF (µmol/s) performance
Extremely reliable package design affirms long lifetime in hash environments

PRIMARY APPLICATIONS
Horticulture

No. E507562

DS415 LUXEON SunPlus 5050 Product Datasheet ©2025 Lumileds Holding B.V. All rights reserved.

Table of Contents

General Product Information **2**
Product Test Conditions 2
Part Number Nomenclature 2
Lumen Maintenance 2
Environmental Compliance 2
Performance Characteristics **3**
Product Selection Guide 3
Optical Characteristics 8
Electrical and Thermal Characteristics 8
Absolute Maximum Ratings **8**
Characteristic Curves **9**
Spectral Power Distribution Characteristics 9
Light Output Characteristics 10
Forward Current Characteristics 13
Radiation Pattern Characteristics 14
Product Bin and Labeling Definitions **15**
Decoding Product Bin Labeling 15
Luminous Flux Bins 16
Color Bin Definitions 17
Forward Voltage Bins 18
Mechanical Dimensions **19**
Reflow Soldering Guidelines **22**
JEDEC Moisture Sensitivity 22
Solder Pad Design 23
Packaging Information **23**
Pocket Tape Dimensions 23
Reel Dimensions 24

 ©2025 Lumileds Holding B.V. All rights reserved.

General Product Information

Product Test Conditions

LUXEON SunPlus 5050 LEDs are tested with a 20ms monopulse specified below at a junction temperature, T_j, of 25°C. Forward voltage and luminous flux are binned at a T_j of 25°C, while color is hot-targeted at a T_j of 85°C.

160mA – LUXEON SunPlus 5050 Round LES/LUXEON SunPlus 5050 HE – 24V and LUXEON 5050 Square LES – 30V
640mA – LUXEON 5050 Round LES/LUXEON 5050 HE/LUXEON 5050 HE Plus – 6V
800mA – LUXEON SunPlus 5050 Square LES – 6V

Part Number Nomenclature

Part numbers for LUXEON SunPlus 5050 follow the convention below:

L 1 5 0 – **A A A A** 5 0 **B B C C C C C**

Where:

A A A A – designates nominal CCT and CRI (2780=2700K, 80CRI; 3090 =3000K, 90CRI, etc., and NSC1 = Nightscape)

B B – designates voltage (06=6V, 24=24V, 30=30V)

C C C C C – designates options for product specification (00000= 5050 Round LES base part, 000S0= 5050 Square LES base part, 000H0=5050 HE base part, 00TH0=5050 HE base part with ESD Sensitivity of Class 3B. Besides, there would be custom part numbers that are derived from base part number for kitting purpose etc., and those would take the last five digits to differentiate from base part number).

Therefore, the following part number is used for a custom part number that derived from LUXEON 5050 Round LES, 4000K 70CRI, 24V:

L 1 5 0 – **4 0 7 0** 5 0 **2 4 L K H G 0**

Lumen Maintenance

Please contact your local Sales Representative or Lumileds Technical Solutions Manager for more information about the long-term performance of this product.

Environmental Compliance

Lumileds LLC is committed to providing environmentally friendly products to the solid-state lighting market. LUXEON SunPlus 5050 is compliant to the European Union directives on the restriction of hazardous substances in electronic equipment, namely the RoHS Directive 2011/65/EU including amendments 2015/863/EU & 2017/2102/EU and REACH Regulation (EC) 1907/2006. Lumileds LLC will not intentionally add the following restricted materials to its products: lead, mercury, cadmium, hexavalent chromium, polybrominated biphenyls (PBB) or polybrominated diphenyl ethers (PBDE).

Performance Characteristics

Product Selection Guide

Table 1. Product performance of LUXEON SunPlus 5050 at rated current, T_j=25°C

PART	NOMINAL CCT [1]	MINIMUM CRI [2, 3]	PPF (umol/s) [2, 3, 4]		PPF/W TYPICAL (umol/J)	PART NUMBER
			MINIMUM	TYPICAL		
LUXEON 5050 Round LES 24V	1800K	70	6.25	7.01	1.80	L150-1870502400000
	2200K	70	7.50	8.41	2.15	L150-2270502400000
	2700K	70	7.28	8.57	2.19	L150-2770502400000
	3000K	70	7.66	8.72	2.23	L150-3070502400000
	3500K	70	8.30	8.87	2.27	L150-3570502400000
	4000K	70	7.10	9.06	2.32	L150-4070502400000
	5000K	70	8.01	9.01	2.31	L150-5070502400000
	5700K	70	8.02	9.00	2.31	L150-5770502400000
	6500K	70	8.04	9.02	2.31	L150-6570502400000
	2200K	80	6.94	8.01	2.05	L150-2280502400000
	2700K	80	7.20	8.44	2.16	L150-2780502400000
	3000K	80	7.16	8.62	2.21	L150-3080502400000
	3500K	80	5.40	8.63	2.21	L150-3580502400000
	4000K	80	7.95	8.75	2.24	L150-4080502400000
	5000K	80	7.74	8.81	2.26	L150-5080502400000
	5700K	80	7.75	8.74	2.24	L150-5780502400000
	6500K	80	8.00	8.75	2.24	L150-6580502400000
	2700K	90	6.77	7.59	1.94	L150-2790502400000
	3000K	90	6.97	7.75	1.98	L150-3090502400000
	3500K	90	7.23	7.90	2.02	L150-3590502400000
	4000K	90	7.58	8.17	2.09	L150-4090502400000
	5000K	90	7.67	8.13	2.08	L150-5090502400000
	5700K	90	7.49	8.08	2.07	L150-5790502400000
LUXEON 5050 Round LES 6V	1800K	70	6.25	7.01	1.80	L150-1870500600000
	2200K	70	7.50	8.41	2.15	L150-2270500600000
	2700K	70	7.28	8.57	2.19	L150-2770500600000
	3000K	70	7.66	8.72	2.23	L150-3070500600000
	3500K	70	8.30	8.87	2.27	L150-3570500600000
	4000K	70	7.10	9.06	2.32	L150-4070500600000
	5000K	70	8.01	9.01	2.31	L150-5070500600000
	5700K	70	8.02	9.00	2.31	L150-5770500600000
	6500K	70	8.04	9.02	2.31	L150-6570500600000
	2200K	80	6.94	8.01	2.05	L150-2280500600000
	2700K	80	7.20	8.44	2.16	L150-2780500600000
	3000K	80	7.16	8.62	2.21	L150-3080500600000
	3500K	80	5.40	8.63	2.21	L150-3580500600000
	4000K	80	7.95	8.75	2.24	L150-4080500600000
	5000K	80	7.74	8.81	2.26	L150-5080500600000
	5700K	80	7.75	8.74	2.24	L150-5780500600000
	6500K	80	8.00	8.75	2.24	L150-6580500600000
	2700K	90	6.77	7.59	1.94	L150-2790500600000
	3000K	90	6.97	7.75	1.98	L150-3090500600000
	3500K	90	7.23	7.90	2.02	L150-3590500600000
	4000K	90	7.58	8.17	2.09	L150-4090500600000
	5000K	90	7.67	8.13	2.08	L150-5090500600000
	5700K	90	7.49	8.08	2.07	L150-5790500600000

Table 1 continued on next page:

1. Correlated color temperature is hot targeted at T_j=85°C.
2. CRI and PPF are specified at T_j =25°. Typical CRI is approximately 2 points higher than the minimum CRI specified, but this is not guaranteed.
3. Lumileds maintains a tolerance of ±2 on CRI and ±7.5% on PPF.
4. PPF data is calculated from luminous flux measurements.

 ©2025 Lumileds Holding B.V. All rights reserved.

Table 1. Product performance of LUXEON SunPlus 5050 at rated current, T_j=25°C, Continued.

PART	NOMINAL CCT [1]	MINIMUM CRI [2, 3]	PPF (umol/s) [2, 3, 4]		PPF/W TYPICAL (umol/J)	PART NUMBER
			MINIMUM	TYPICAL		
LUXEON 5050 Square LES 30V	1800K	70	9.03	9.70	1.99	L150-18705030000S0
	2200K	70	9.03	10.30	2.11	L150-22705030000S0
	2700K	70	9.36	10.60	2.17	L150-27705030000S0
	3000K	70	9.71	10.70	2.19	L150-30705030000S0
	3500K	70	9.53	10.80	2.21	L150-35705030000S0
	4000K	70	9.68	10.90	2.23	L150-40705030000S0
	5000K	70	9.69	11.00	2.25	L150-50705030000S0
	5700K	70	9.98	11.10	2.27	L150-57705030000S0
	6500K	70	9.56	11.00	2.25	L150-65705030000S0
	2200K	80	9.23	9.85	2.02	L150-22805030000S0
	2700K	80	9.29	9.97	2.04	L150-27805030000S0
	3000K	80	9.70	10.24	2.10	L150-30805030000S0
	3500K	80	9.25	10.12	2.07	L150-35805030000S0
	4000K	80	9.87	10.52	2.16	L150-40805030000S0
	5000K	80	9.93	10.66	2.18	L150-50805030000S0
	5700K	80	9.76	10.67	2.19	L150-57805030000S0
	6500K	80	10.26	10.59	2.17	L150-65805030000S0
	2700K	90	9.55	9.82	2.01	L150-27905030000S0
	3000K	90	9.48	10.09	2.07	L150-30905030000S0
	3500K	90	9.48	10.06	2.06	L150-35905030000S0
	4000K	90	9.81	10.16	2.08	L150-40905030000S0
	5000K	90	9.88	10.23	2.10	L150-50905030000S0
	5700K	90	9.87	10.28	2.11	L150-57905030000S0
LUXEON 5050 Square LES 6V	1800K	70	9.03	9.70	1.99	L150-18705006000S0
	2200K	70	9.03	10.30	2.11	L150-22705006000S0
	2700K	70	9.36	10.60	2.17	L150-27705006000S0
	3000K	70	9.71	10.70	2.19	L150-30705006000S0
	3500K	70	9.53	10.80	2.21	L150-35705006000S0
	4000K	70	9.68	10.90	2.23	L150-40705006000S0
	5000K	70	9.69	11.00	2.25	L150-50705006000S0
	5700K	70	9.98	11.10	2.27	L150-57705006000S0
	6500K	70	9.56	11.00	2.25	L150-65705006000S0
	2200K	80	9.23	9.85	2.02	L150-22805006000S0
	2700K	80	9.29	9.97	2.04	L150-27805006000S0
	3000K	80	9.70	10.24	2.10	L150-30805006000S0
	3500K	80	9.25	10.12	2.07	L150-35805006000S0
	4000K	80	9.87	10.52	2.16	L150-40805006000S0
	5000K	80	9.93	10.66	2.18	L150-50805006000S0
	5700K	80	9.76	10.67	2.19	L150-57805006000S0
	6500K	80	10.26	10.59	2.17	L150-65805006000S0
	2700K	90	9.55	9.82	2.01	L150-27905006000S0
	3000K	90	9.48	10.09	2.07	L150-30905006000S0
	3500K	90	9.48	10.06	2.06	L150-35905006000S0
	4000K	90	9.81	10.16	2.08	L150-40905006000S0
	5000K	90	9.88	10.23	2.10	L150-50905006000S0
	5700K	90	9.87	10.28	2.11	L150-57905006000S0

Table 1 continued on next page:

1. Correlated color temperature is hot targeted at T_j=85°C.
2. CRI and PPF are specified at T_j =25°. Typical CRI is approximately 2 points higher than the minimum CRI specified, but this is not guaranteed.
3. Lumileds maintains a tolerance of ±2 on CRI and ±7.5% on PPF.
4. PPF data is calculated from luminous flux measurements.

 ©2025 Lumileds Holding B.V. All rights reserved.

Table 1. Product performance of LUXEON SunPlus 5050 at rated current, T_j=25°C, Continued.

PART	NOMINAL CCT [1]	MINIMUM CRI [2, 3]	PPF (umol/s) [2, 3, 4]		PPF/W TYPICAL (umol/J)	PART NUMBER
			MINIMUM	TYPICAL		
LUXEON 5050 HE 24V	1800K	70	7.30	8.04	2.08	L150-18705024000H0
	2200K	70	8.06	8.67	2.24	L150-22705024000H0
	2700K	70	8.38	8.94	2.31	L150-27705024000H0
	3000K	70	8.29	9.09	2.35	L150-30705024000H0
	3500K	70	8.21	9.28	2.40	L150-35705024000H0
	4000K	70	8.42	9.37	2.42	L150-40705024000H0
	5000K	70	8.61	9.47	2.45	L150-50705024000H0
	5700K	70	9.00	9.51	2.46	L150-57705024000H0
	6500K	70	8.58	9.62	2.48	L150-65705024000H0
	2200K	80	7.51	8.15	2.10	L150-22805024000H0
	2700K	80	7.84	8.52	2.20	L150-27805024000H0
	3000K	80	7.66	8.73	2.25	L150-30805024000H0
	3500K	80	8.09	8.92	2.30	L150-35805024000H0
	4000K	80	8.18	8.97	2.32	L150-40805024000H0
	5000K	80	8.42	9.01	2.33	L150-50805024000H0
	5700K	80	8.29	9.07	2.34	L150-57805024000H0
	6500K	80	8.58	9.11	2.35	L150-65805024000H0
	2700K	90	7.73	8.20	2.12	L150-27905024000H0
	3000K	90	7.92	8.28	2.14	L150-30905024000H0
	3500K	90	8.11	8.42	2.18	L150-35905024000H0
	4000K	90	8.14	8.58	2.22	L150-40905024000H0
	5000K	90	8.36	8.77	2.26	L150-50905024000H0
	5700K	90	8.31	8.79	2.27	L150-57905024000H0
	1800K	70	7.30	8.00	2.07	L150-1870502400TH0
	2200K	70	8.06	8.63	2.23	L150-2270502400TH0
	2700K	70	8.38	8.90	2.30	L150-2770502400TH0
	3000K	70	8.29	9.04	2.34	L150-3070502400TH0
	3500K	70	8.21	9.23	2.38	L150-3570502400TH0
	4000K	70	8.42	9.32	2.41	L150-4070502400TH0
	5000K	70	8.61	9.42	2.43	L150-5070502400TH0
	5700K	70	9.00	9.46	2.44	L150-5770502400TH0
	6500K	70	8.58	9.57	2.47	L150-6570502400TH0
	2200K	80	7.51	8.09	2.09	L150-2280502400TH0
	2700K	80	7.84	8.40	2.17	L150-2780502400TH0
	3000K	80	7.66	8.62	2.23	L150-3080502400TH0
	3500K	80	8.09	8.83	2.28	L150-3580502400TH0
	4000K	80	8.18	8.98	2.32	L150-4080502400TH0
	5000K	80	8.42	9.03	2.33	L150-5080502400TH0
	5700K	80	8.29	9.05	2.34	L150-5780502400TH0
	6500K	80	8.58	9.09	2.35	L150-6580502400TH0
	2700K	90	7.73	8.20	2.12	L150-2790502400TH0
	3000K	90	7.92	8.28	2.14	L150-3090502400TH0
	3500K	90	8.11	8.42	2.18	L150-3590502400TH0
	4000K	90	8.14	8.58	2.22	L150-4090502400TH0
	5000K	90	8.36	8.77	2.26	L150-5090502400TH0
	5700K	90	8.31	8.79	2.27	L150-5790502400TH0

Table 1 continued on next page:

1. Correlated color temperature is hot targeted at T_j=85°C.
2. CRI and PPF are specified at T_j =25°. Typical CRI is approximately 2 points higher than the minimum CRI specified, but this is not guaranteed.
3. Lumileds maintains a tolerance of ±2 on CRI and ±7.5% on PPF.
4. PPF data is calculated from luminous flux measurements.

 ©2025 Lumileds Holding B.V. All rights reserved.

Table 1. Product performance of LUXEON SunPlus 5050 at rated current, T_j=25°C, Continued.

PART	NOMINAL CCT [1]	MINIMUM CRI [2, 3]	PPF (umol/s) [2, 3, 4]		PPF/W TYPICAL (umol/J)	PART NUMBER
			MINIMUM	TYPICAL		
LUXEON 5050 HE 6V	1800K	70	7.30	8.04	2.08	L150-18705006000H0
	2200K	70	8.06	8.67	2.24	L150-22705006000H0
	2700K	70	8.38	8.94	2.31	L150-27705006000H0
	3000K	70	8.29	9.09	2.35	L150-30705006000H0
	3500K	70	8.21	9.28	2.40	L150-35705006000H0
	4000K	70	8.42	9.37	2.42	L150-40705006000H0
	5000K	70	8.61	9.47	2.45	L150-50705006000H0
	5700K	70	9.00	9.51	2.46	L150-57705006000H0
	6500K	70	8.58	9.62	2.48	L150-65705006000H0
	2200K	80	7.51	8.15	2.10	L150-22805006000H0
	2700K	80	7.84	8.52	2.20	L150-27805006000H0
	3000K	80	7.66	8.73	2.25	L150-30805006000H0
	3500K	80	8.09	8.92	2.30	L150-35805006000H0
	4000K	80	8.18	8.97	2.32	L150-40805006000H0
	5000K	80	8.42	9.01	2.33	L150-50805006000H0
	5700K	80	8.29	9.07	2.34	L150-57805006000H0
	6500K	80	8.58	9.11	2.35	L150-65805006000H0
	2700K	90	7.73	8.20	2.12	L150-27905006000H0
	3000K	90	7.92	8.28	2.14	L150-30905006000H0
	3500K	90	8.11	8.42	2.18	L150-35905006000H0
	4000K	90	8.14	8.58	2.22	L150-40905006000H0
	5000K	90	8.36	8.77	2.26	L150-50905006000H0
	5700K	90	8.31	8.79	2.27	L150-57905006000H0
	1800K	70	7.30	8.00	2.07	L150-1870500600TH0
	2200K	70	8.06	8.63	2.23	L150-2270500600TH0
	2700K	70	8.38	8.90	2.30	L150-2770500600TH0
	3000K	70	8.29	9.04	2.34	L150-3070500600TH0
	3500K	70	8.21	9.23	2.38	L150-3570500600TH0
	4000K	70	8.42	9.32	2.41	L150-4070500600TH0
	5000K	70	8.61	9.42	2.43	L150-5070500600TH0
	5700K	70	9.00	9.46	2.44	L150-5770500600TH0
	6500K	70	8.58	9.57	2.47	L150-6570500600TH0
	2200K	80	7.51	8.09	2.09	L150-2280500600TH0
	2700K	80	7.84	8.40	2.17	L150-2780500600TH0
	3000K	80	7.66	8.62	2.23	L150-3080500600TH0
	3500K	80	8.09	8.83	2.28	L150-3580500600TH0
	4000K	80	8.18	8.98	2.32	L150-4080500600TH0
	5000K	80	8.42	9.03	2.33	L150-5080500600TH0
	5700K	80	8.29	9.05	2.34	L150-5780500600TH0
	6500K	80	8.58	9.09	2.35	L150-6580500600TH0
	2700K	90	7.73	8.20	2.12	L150-2790500600TH0
	3000K	90	7.92	8.28	2.14	L150-3090500600TH0
	3500K	90	8.11	8.42	2.18	L150-3590500600TH0
	4000K	90	8.14	8.58	2.22	L150-4090500600TH0
	5000K	90	8.36	8.77	2.26	L150-5090500600TH0
	5700K	90	8.31	8.79	2.27	L150-5790500600TH0

Notes for Table 1:
1. Correlated color temperature is hot targeted at T_j=85°C.
2. CRI and PPF are specified at T_j =25°. Typical CRI is approximately 2 points higher than the minimum CRI specified, but this is not guaranteed.
3. Lumileds maintains a tolerance of ±2 on CRI and ±7.5% on PPF.
4. PPF data is calculated from luminous flux measurements.

 ©2025 Lumileds Holding B.V. All rights reserved.

Table 1. Product performance of LUXEON SunPlus 5050 at rated current, T_j=25°C, Continued.

PART	NOMINAL CCT [1]	MINIMUM CRI [2, 3]	PPF (umol/s) [2, 3, 4]		PPF/W TYPICAL (umol/J)	PART NUMBER
			MINIMUM	TYPICAL		
LUXEON 5050 HE Plus - 6V	1800K	70	8.15	8.41	2.25	L150-1870500600HH0
	2200K	70	8.62	9.07	2.42	L150-2270500600HH0
	2700K	70	8.65	9.26	2.47	L150-2770500600HH0
	3000K	70	8.94	9.31	2.49	L150-3070500600HH0
	3500K	70	8.74	9.36	2.50	L150-3570500600HH0
	4000K	70	9.15	9.61	2.57	L150-4070500600HH0
	5000K	70	9.27	9.68	2.59	L150-5070500600HH0
	5700K	70	9.18	9.62	2.57	L150-5770500600HH0
	6500K	70	9.30	9.81	2.62	L150-6570500600HH0
	2200K	80	7.79	8.36	2.23	L150-2280500600HH0
	2700K	80	8.49	8.93	2.39	L150-2780500600HH0
	3000K	80	8.29	8.98	2.40	L150-3080500600HH0
	3500K	80	8.75	9.12	2.44	L150-3580500600HH0
	4000K	80	8.98	9.36	2.50	L150-4080500600HH0
	5000K	80	9.08	9.37	2.50	L150-5080500600HH0
	5700K	80	8.84	9.39	2.51	L150-5780500600HH0
	6500K	80	8.84	9.50	2.54	L150-6580500600HH0

Notes for Table 1:
1. Correlated color temperature is hot targeted at T_j=85°C.
2. CRI and PPF are specified at T_j =25°. Typical CRI is approximately 2 points higher than the minimum CRI specified, but this is not guaranteed.
3. Lumileds maintains a tolerance of ±2 on CRI and ±7.5% on PPF.
4. PPF data is calculated from luminous flux measurements.

 ©2025 Lumileds Holding B.V. All rights reserved.

Optical Characteristics

Table 2. Optical characteristics for LUXEON SunPlus 5050 at test current, T_j=25°C

PART NUMBER	TYPICAL TOTAL INCLUDED ANGLE [1]	TYPICAL VIEWING ANGLE [2]
L150-xxxx50xx000x0	138°	116°

Notes for Table 2:
1. Total angle at which 90% of total luminous flux is captured.
2. Viewing angle is the off axis angle from the LED centerline where the luminous intensity is ½ of the peak value.

Electrical and Thermal Characteristics

Table 3. Electrical and thermal characteristics for LUXEON SunPlus 5050 at test current, T_j=25°C

PART	FORWARD VOLTAGE [1] (V_f)			TYPICAL TEMPERATURE COEFFICIENT OF FORWARD VOLTAGE [2] (mV/°C)	TYPICAL THERMAL RESISTANCE—JUNCTION TO SOLDER PAD (°C/W)
	MINIMUM	TYPICAL	MAXIMUM		
LUXEON 5050 Round LES - 24V	23.5	24.4	26.5	-12	2.4
LUXEON 5050 Round LES - 6V	5.8	6.1	6.6	-3	2.4
LUXEON 5050 Square LES - 30V	29.0	30.5	32.0	-15	1.4
LUXEON 5050 Square LES - 6V	5.8	6.1	6.6	-3	1.4
LUXEON 5050 HE - 24V	22.7	24.2	25.8	-12	2.2
LUXEON 5050 HE - 6V	5.6	6.05	6.4	-3	2.2
LUXEON 5050 HE Plus - 6V	5.6	5.85	6.1	-3	1.1

Notes for Table 3:
1. Lumileds maintains a tolerance of ±0.1V on forward voltage measurements.
2. Measured between 25°C and 85°C.

Absolute Maximum Ratings

Table 4. Absolute maximum ratings for LUXEON SunPlus 5050

PARAMETER	MAXIMUM PERFORMANCE
DC Forward Current [1, 2]	240mA for LUXEON 5050 Round LES - 24V 800mA for LUXEON 5050 Round LES - 6V 240mA for LUXEON 5050 Square LES - 30V 1000mA for LUXEON 5050 Square LES - 6V 240mA for LUXEON 5050 HE - 24V 800mA for LUXEON 5050 HE - 6V 1200mA for LUXEON 5050 HE Plus - 6V
Peak Pulsed Forward Current [1, 3]	300mA for LUXEON 5050 Round LES - 24V 1000mA for LUXEON 5050 Round LES - 6V 300mA for LUXEON 5050 Square LES - 30V 1250mA for LUXEON 5050 Square LES - 6V 300mA for LUXEON 5050 HE - 24V 1000mA for LUXEON 5050 HE - 6V 1500mA for LUXEON 5050 HE Plus - 6V
LED Junction Temperature [1] (DC & Pulse)	125°C
ESD Sensitivity (ANSI/ESDA/JEDEC JS-001-2012)	Class 3B for L150-xxxx50xx00TH0 Class 2 for the rest
Operating Case Temperature [1]	-40°C to 105°C
LED Storage Temperature	-40°C to 105°C
Allowable Reflow Cycles	3
Reverse Voltage ($V_{reverse}$)	LUXEON LEDs are not designed to be driven in reverse bias

Notes for Table 4:
1. Proper current derating must be observed to maintain the junction temperature below the maximum allowable junction temperature.
2. Residual periodic variations due to power conversion from alternating current (AC) to direct current (DC), also called "ripple," are acceptable if the following conditions are met:
   – The frequency of the ripple current is 100Hz or higher
   – The average current for each cycle does not exceed the maximum allowable DC forward current
   – The maximum amplitude of the ripple does not exceed the maximum peak pulsed forward current
3. At <=10% duty cycle with pulse width of 10ms

 ©2025 Lumileds Holding B.V. All rights reserved.

Characteristic Curves

Spectral Power Distribution Characteristics

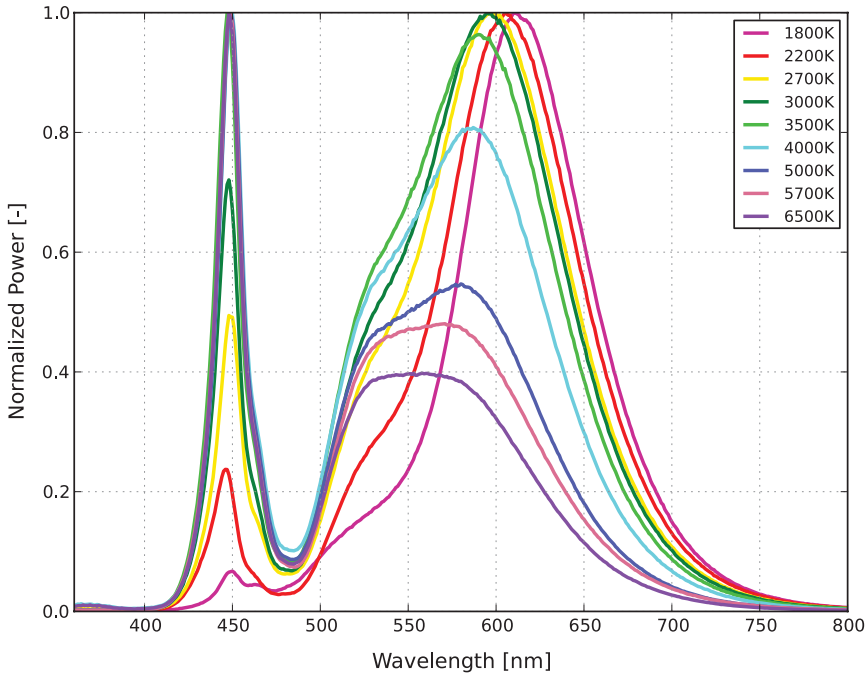

Figure 1a. Typical normalized power vs. wavelength for 70CRI LUXEON 5050 at test current, T_j=25°C

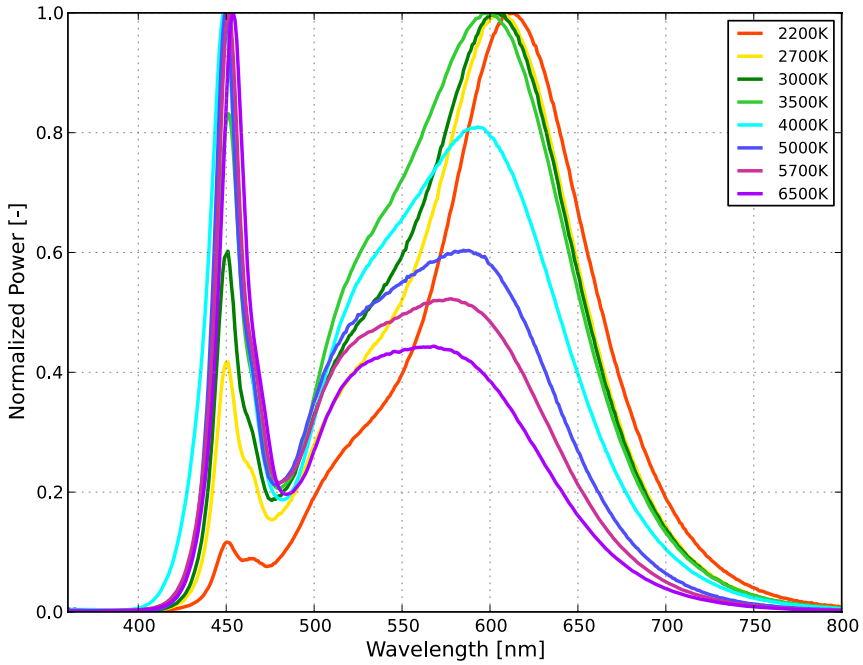

Figure 1b. Typical normalized power vs. wavelength for 80CRI LUXEON 5050 at test current, T_j=25°C

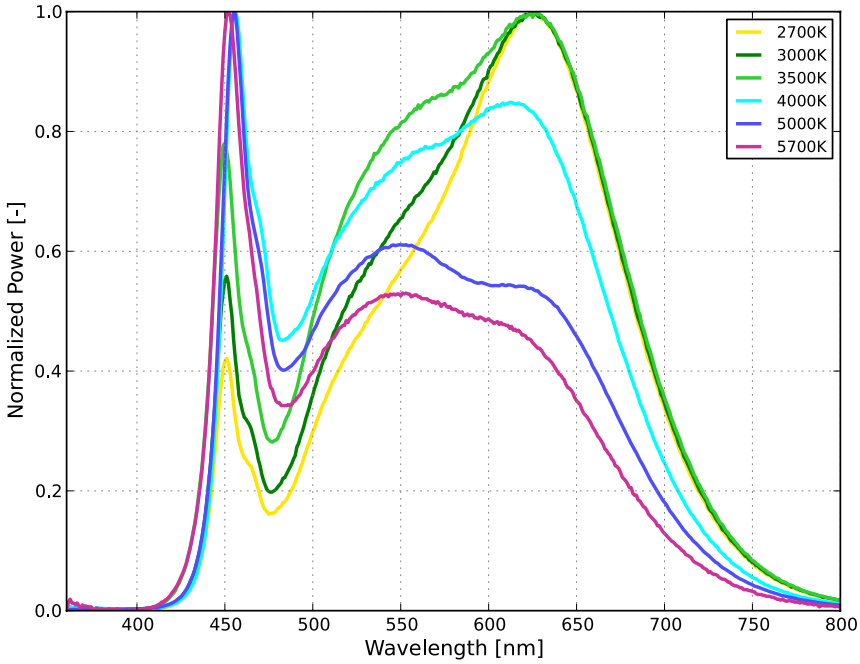

Figure 1c. Typical normalized power vs. wavelength for 90CRI LUXEON 5050 at test current, T_j=25°C

Light Output Characteristics

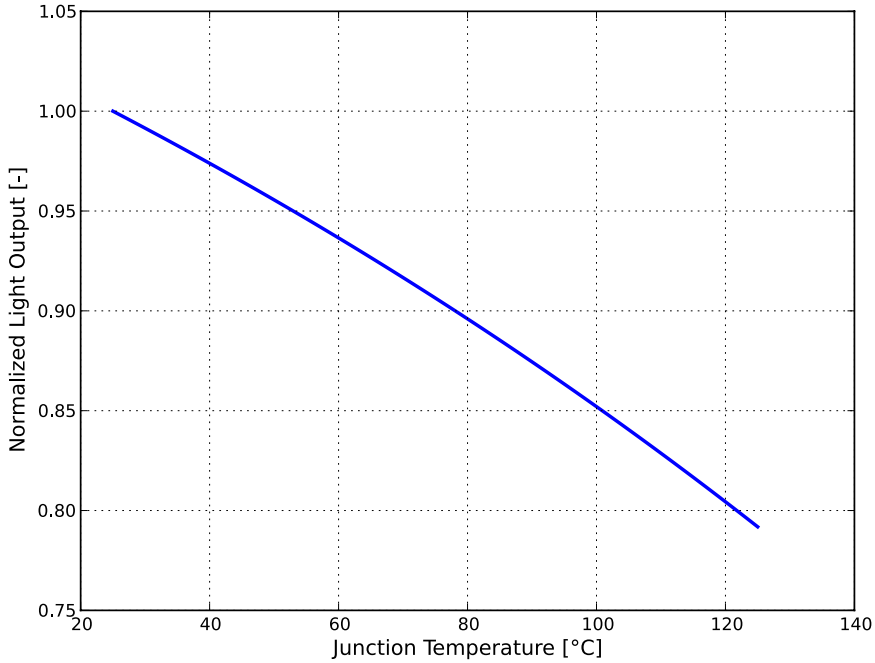

Figure 2. Typical normalized light output vs. junction temperature for all LUXEON 5050 at test current

 ©2025 Lumileds Holding B.V. All rights reserved.

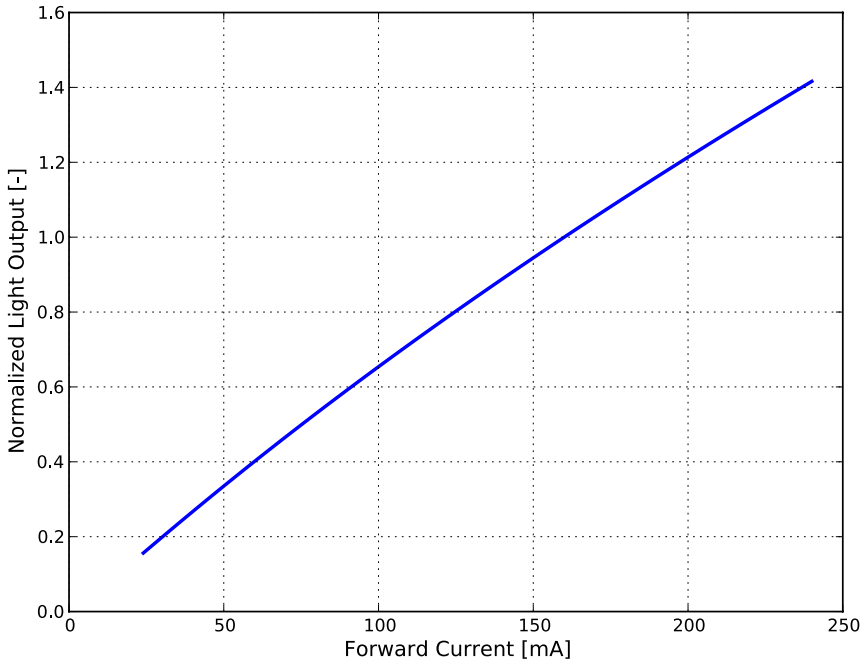

Figure 3a. Typical normalized light output vs. forward current for LUXEON 5050 Round LES - 24V, LUXEON 5050 HE - 24V and LUXEON 5050 Square LES - 30V, T_j=25°C

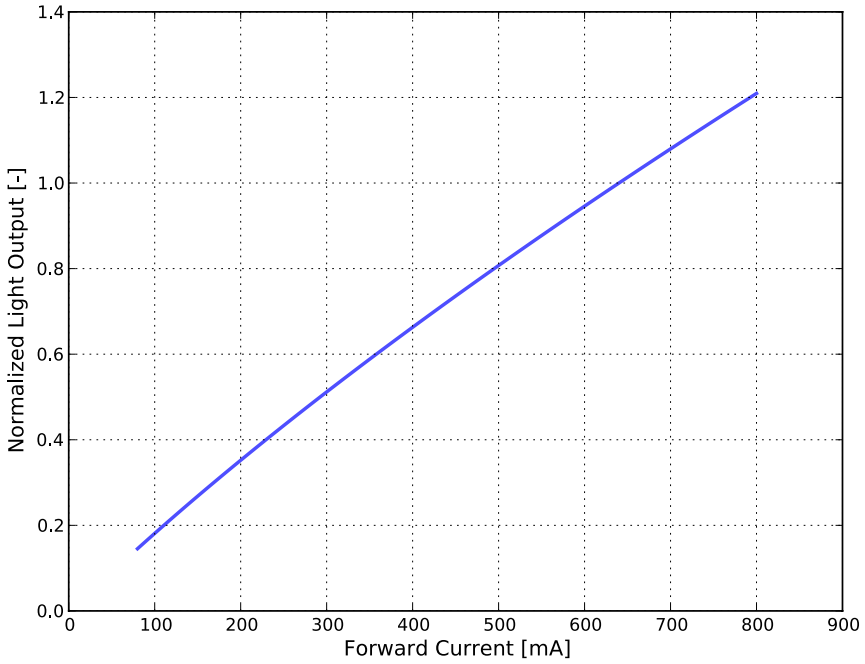

Figure 3b. Typical normalized light output vs. forward current for LUXEON 5050 Round LES - 6V, LUXEON 5050 HE - 6V and LUXEON 5050 HE Plus - 6V, T_j=25°C

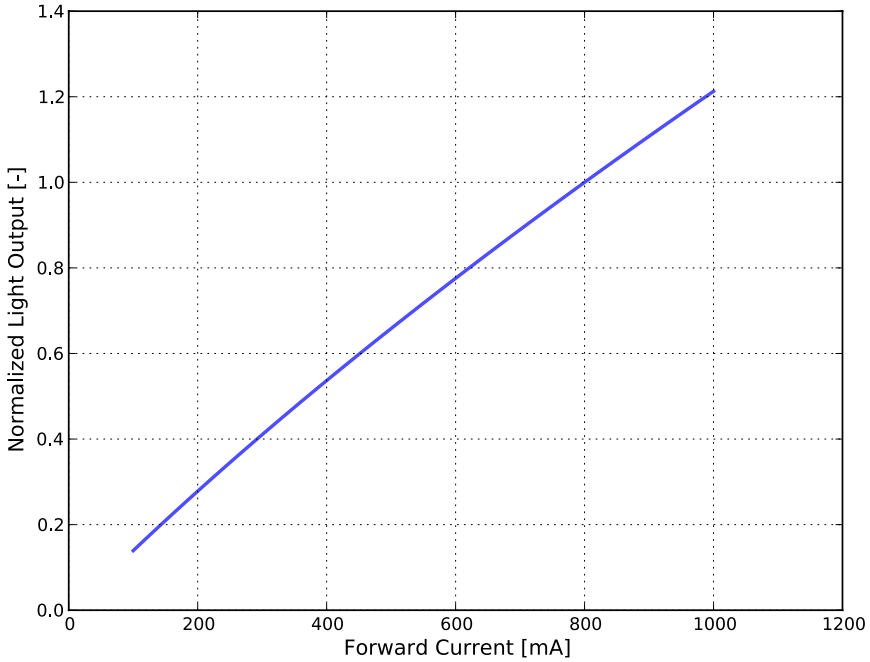

Figure 3c. Typical normalized light output vs. forward current for LUXEON 5050 Square LES - 6V, T_j=25°C

Forward Current Characteristics

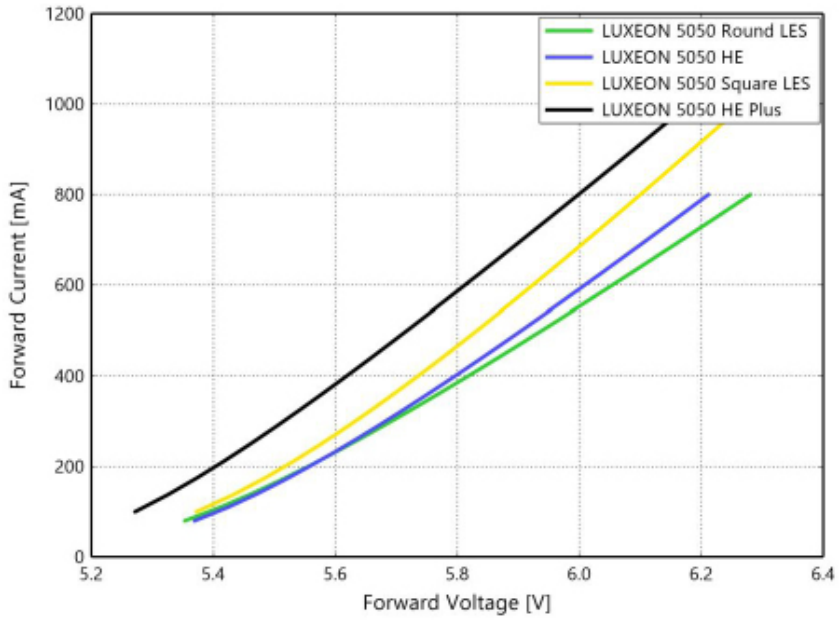

Figure 4a. Typical forward current vs. forward voltage for LUXEON 5050 Round LES - 6V, LUXEON 5050 HE - 6V, LUXEON 5050 Square LES - 6V and LUXEON 5050 HE Plus - 6V, T_j=25°C

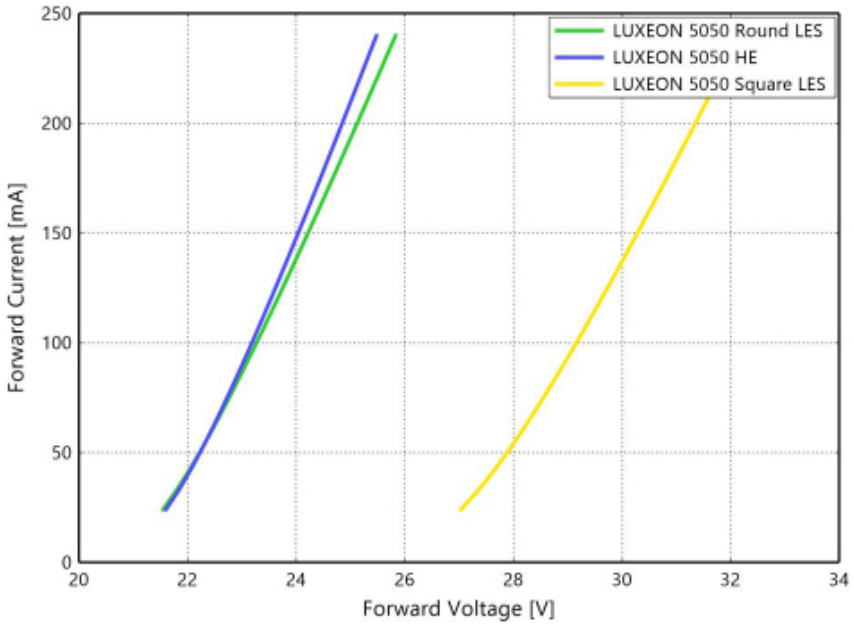

Figure 4b. Typical forward current vs. forward voltage for LUXEON 5050 Round LES - 24V, LUXEON 5050 HE - 24V, LUXEON 5050 Square LES - 30V, T_j=25°C

Radiation Pattern Characteristics

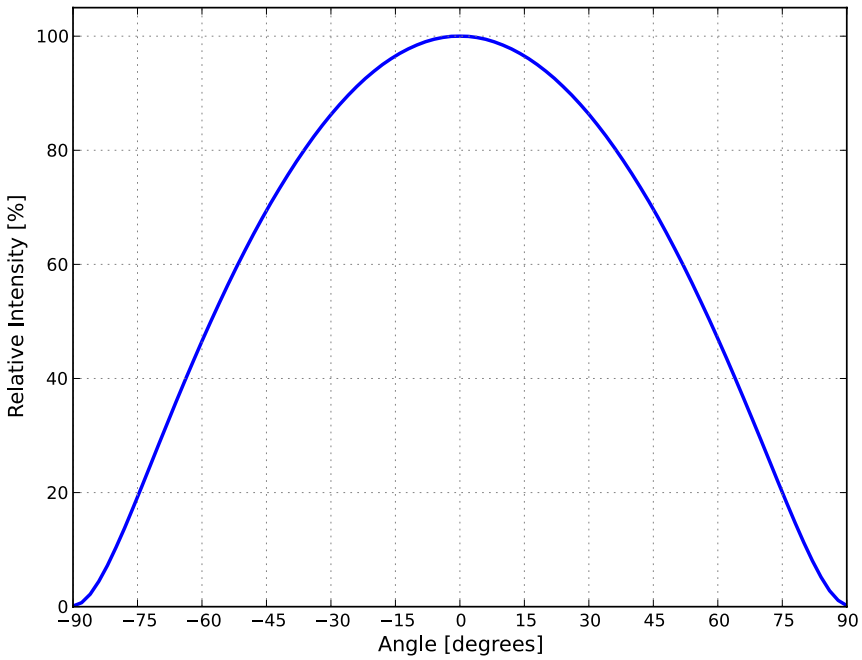

Figure 5. Typical radiation pattern for all LUXEON 5050s at test current, T_j=25°C

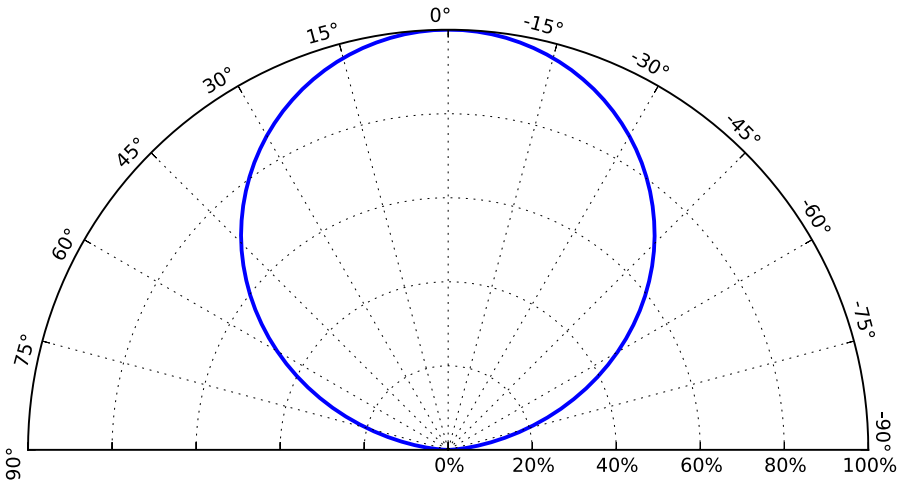

Figure 6. Typical polar radiation pattern for all LUXEON 5050s at test current, T_j=25°C

 ©2025 Lumileds Holding B.V. All rights reserved.

Product Bin and Labeling Definitions

Decoding Product Bin Labeling

In the manufacturing of semiconductor products, there are variations in performance around the average values given in the technical datasheet. For this reason, Lumileds bins LED components for luminous flux or radiometric power, color point, peak or dominant wavelength and forward voltage.

LUXEON SunPlus 5050 Round LES LEDs are labeled using a 4-digit alphanumeric CAT code following the format below:

A B C C

Where:

A – designates luminous flux bin (example: L=600 to 650 lm, M=650 to 700 lm)

B – designates color bin (example: 3=3 SDCM, 5=5 SDCM parts)

C C – designates forward voltage bin (example: A1, A2, B1, B2)

Therefore, a LUXEON SunPlus 5050 Round LES with a lumen range of 600 to 650 lm, color bin of 3 and forward voltage range of 23.5 to 24.2V has the following CAT code:

L 3 A 1

LUXEON SunPlus 5050 Square LES LEDs are labeled using a 4-digit alphanumeric CAT code following the format below:

A B B C

Where:

A – designates luminous flux bin (example: L=600 to 650 lm, M=650 to 700 lm)

B B – designates color bin: (example: 83=2700K and 3 SDCM, 35=5000K and 5 SDCM)

C – designates forward voltage bin (example: A, B, C, D)

Therefore, a LUXEON SunPlus 5050 Square LES with a lumen range of 600 to 650 lm, color bin of 83 and forward voltage range of 29.0 to 30.0V has the following CAT code:

L 8 3 A

 ©2025 Lumileds Holding B.V. All rights reserved.

Luminous Flux Bins

Table 5 lists the standard luminous flux bins for LUXEON SunPlus 5050 LEDs. Although several bins are outlined, product availability in a particular bin varies by production run and by product performance. Not all bins are available in all CCTs.

Table 5a. Luminous flux bin definitions for LUXEON SunPlus 5050 Round LES and Square LES, T_j=25°C

BIN	LUMINOUS FLUX [1] (lm)	
	MINIMUM	MAXIMUM
G	400	450
H	450	500
J	500	550
K	550	600
L	600	650
M	650	700
N	700	750
P	750	800
Q	800	850
R	850	900
S	900	950
T	950	1000

Notes for Table 5a:
1. Lumileds maintains a tolerance of ±7% on luminous flux measurements.

Table 5b. Luminous flux bin definitions for LUXEON 5050 HE and LUXEON 5050 HE Plus, T_j=25°C

BIN	LUMINOUS FLUX [1] (lm)	
	MINIMUM	MAXIMUM
B	425	450
C	450	475
D	475	500
E	500	525
F	525	550
G	550	575
H	575	600
J	600	625
K	625	650
L	650	675
M	675	700
N	700	725
P	725	750
Q	750	775

Notes for Table 5b:
1. Lumileds maintains a tolerance of ±7% on luminous flux measurements.

 ©2025 Lumileds Holding B.V. All rights reserved.

Color Bin Definitions

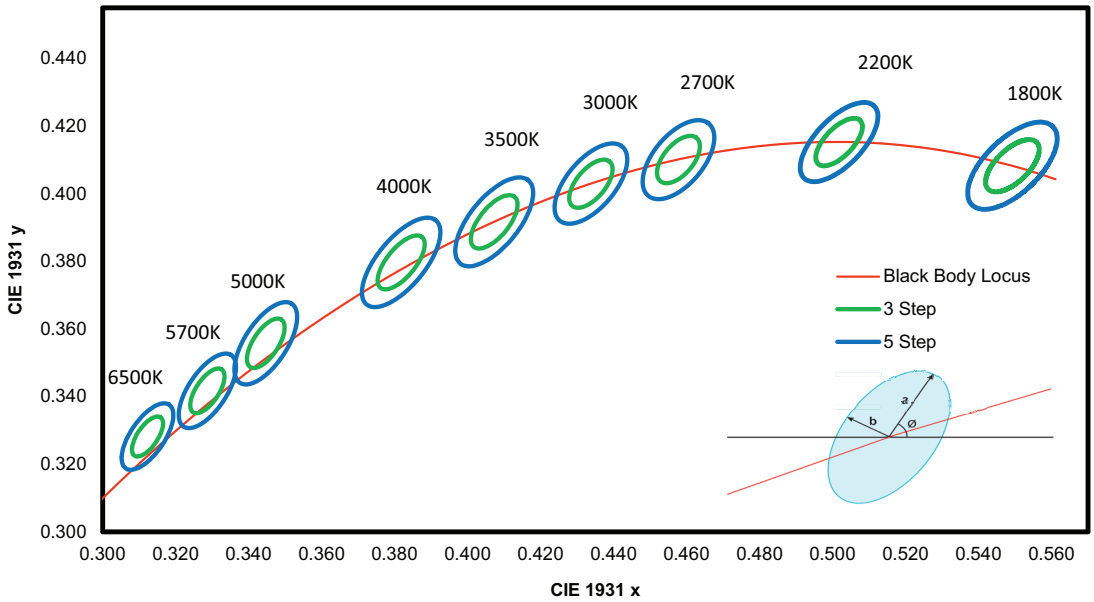

Figure 7. 3- and 5-step MacAdam ellipse illustration for hot-color targeting expected at 85°C

Table 6. 3- and 5-step MacAdam ellipse color bin definitions for LUXEON SunPlus 5050 at test current, hot-color targeted at T_j=85°C

NOMINAL CCT	COLOR SPACE	CENTER POINT [1] (cx, cy)	MAJOR AXIS, a	MINOR AXIS, b	ELLIPSE ROTATION ANGLE, θ	LUXEON 5050 ROUND LES, LUXEON 5050 HE AND 5050 HE PLUS COLOR BIN CODE	LUXEON 5050 SQUARE LES COLOR BIN CODE
1800K	Single 3-step MacAdam ellipse	(0.5493, 0.4083)	0.00962	0.00462	47.34°	3	B3
2200K	Single 3-step MacAdam ellipse	(0.5018, 0.4153)	0.00863	0.00398	49.27°	3	A3
2700K	Single 3-step MacAdam ellipse	(0.4578, 0.4101)	0.00810	0.00420	53.70°	3	83
3000K	Single 3-step MacAdam ellipse	(0.4338, 0.4030)	0.00834	0.00408	53.22°	3	73
3500K	Single 3-step MacAdam ellipse	(0.4073, 0.3917)	0.00927	0.00414	54.00°	3	63
4000K	Single 3-step MacAdam ellipse	(0.3818, 0.3797)	0.00939	0.00402	53.72°	3	53
5000K	Single 3-step MacAdam ellipse	(0.3447, 0.3558)	0.00822	0.00354	59.62°	3	33
5700K	Single 3-step MacAdam ellipse	(0.3287, 0.3417)	0.00745	0.00320	59.09°	3	23
6500K	Single 3-step MacAdam ellipse	(0.3123, 0.3282)	0.00669	0.00285	58.57°	3	13
1800K	Single 5-step MacAdam ellipse	(0.5493, 0.4083)	0.00962	0.00462	47.34°	5	B5
2200K	Single 5-step MacAdam ellipse	(0.5018, 0.4153)	0.01438	0.00663	49.27°	5	A5
2700K	Single 5-step MacAdam ellipse	(0.4578, 0.4101)	0.01350	0.00700	53.70°	5	85
3000K	Single 5-step MacAdam ellipse	(0.4338, 0.4030)	0.01390	0.00680	53.22°	5	75
3500K	Single 5-step MacAdam ellipse	(0.4073, 0.3917)	0.01545	0.00690	54.00°	5	65
4000K	Single 5-step MacAdam ellipse	(0.3818, 0.3797)	0.01565	0.00670	53.72°	5	55
5000K	Single 5-step MacAdam ellipse	(0.3447, 0.3558)	0.01370	0.00590	59.62°	5	35
5700K	Single 5-step MacAdam ellipse	(0.3287, 0.3417)	0.01243	0.00533	59.09°	5	25
6500K	Single 5-step MacAdam ellipse	(0.3123, 0.3282)	0.01115	0.00475	58.57°	5	15

Notes for Table 6:
1. Lumileds maintains a tolerance of ±0.005 on x and y coordinates in the CIE 1931 color space.

Forward Voltage Bins

Table 7. Forward voltage bin definitions for LUXEON SunPlus 5050, T_j=25°C

PART	BIN	FORWARD VOLTAGE [1] (V_f)	
		MINIMUM	MAXIMUM
LUXEON 5050 Round LES - 24V	A1	23.5	24.2
	A2	24.2	25.0
	B1	25.0	25.8
	B2	25.8	26.5
LUXEON 5050 Round LES - 6V	A1	5.8	6.0
	A2	6.0	6.2
	B1	6.2	6.4
	B2	6.4	6.6
LUXEON 5050 Square LES - 30V	A	29.0	30.0
	B	30.0	31.0
	C	31.0	32.0
LUXEON 5050 Square LES - 6V	A	5.8	6.0
	B	6.0	6.2
	C	6.2	6.4
	D	6.4	6.6
LUXEON 5050 HE - 24V	A0	22.7	23.5
	A1	23.5	24.2
	A2	24.2	25.0
	B1	25.0	25.8
LUXEON 5050 HE - 6V and LUXEON 5050 HE Plus - 6V	A0	5.6	5.8
	A1	5.8	6.0
	A2	6.0	6.2
		6.2	6.4

Notes for Table 7:
1. Lumileds maintains a tolerance of ±0.1V on forward voltage measurements.

 ©2025 Lumileds Holding B.V. All rights reserved.

Mechanical Dimensions

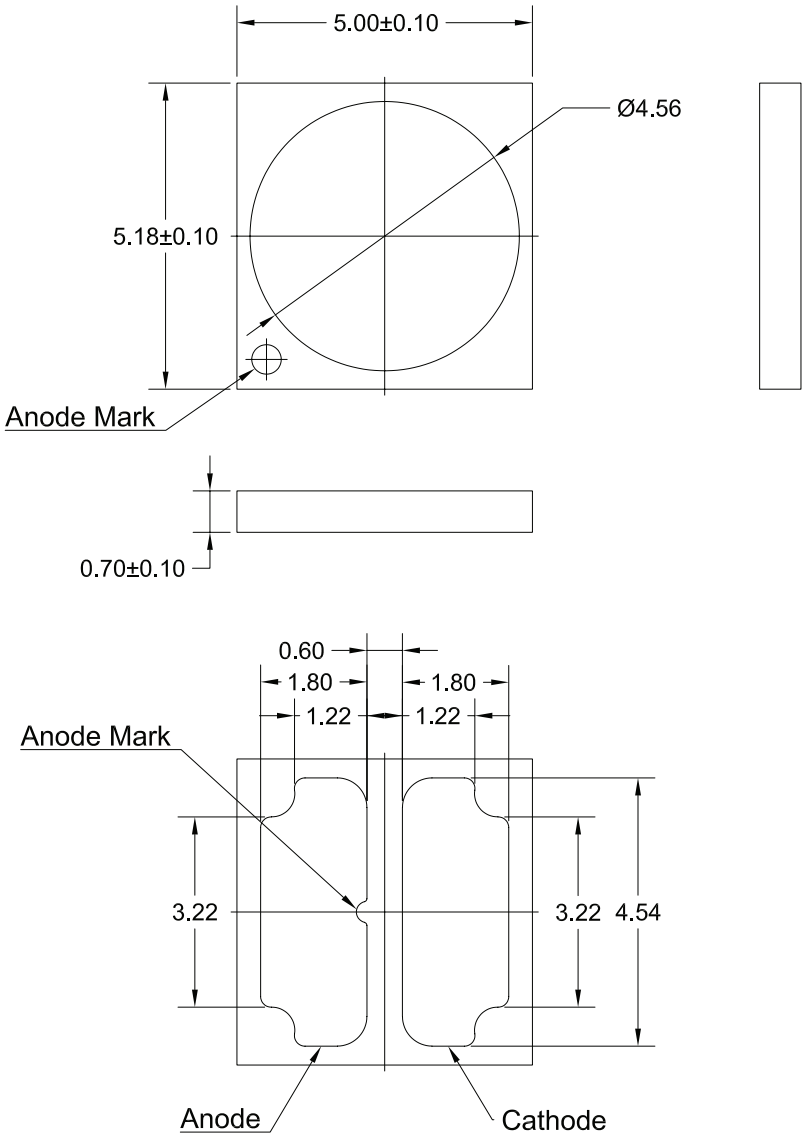

Figure 8a. Mechanical dimensions for LUXEON SunPlus 5050 Round LES

Notes for Figure 8a:
1. Drawings are not to scale.
2. All dimensions are in millimeters.

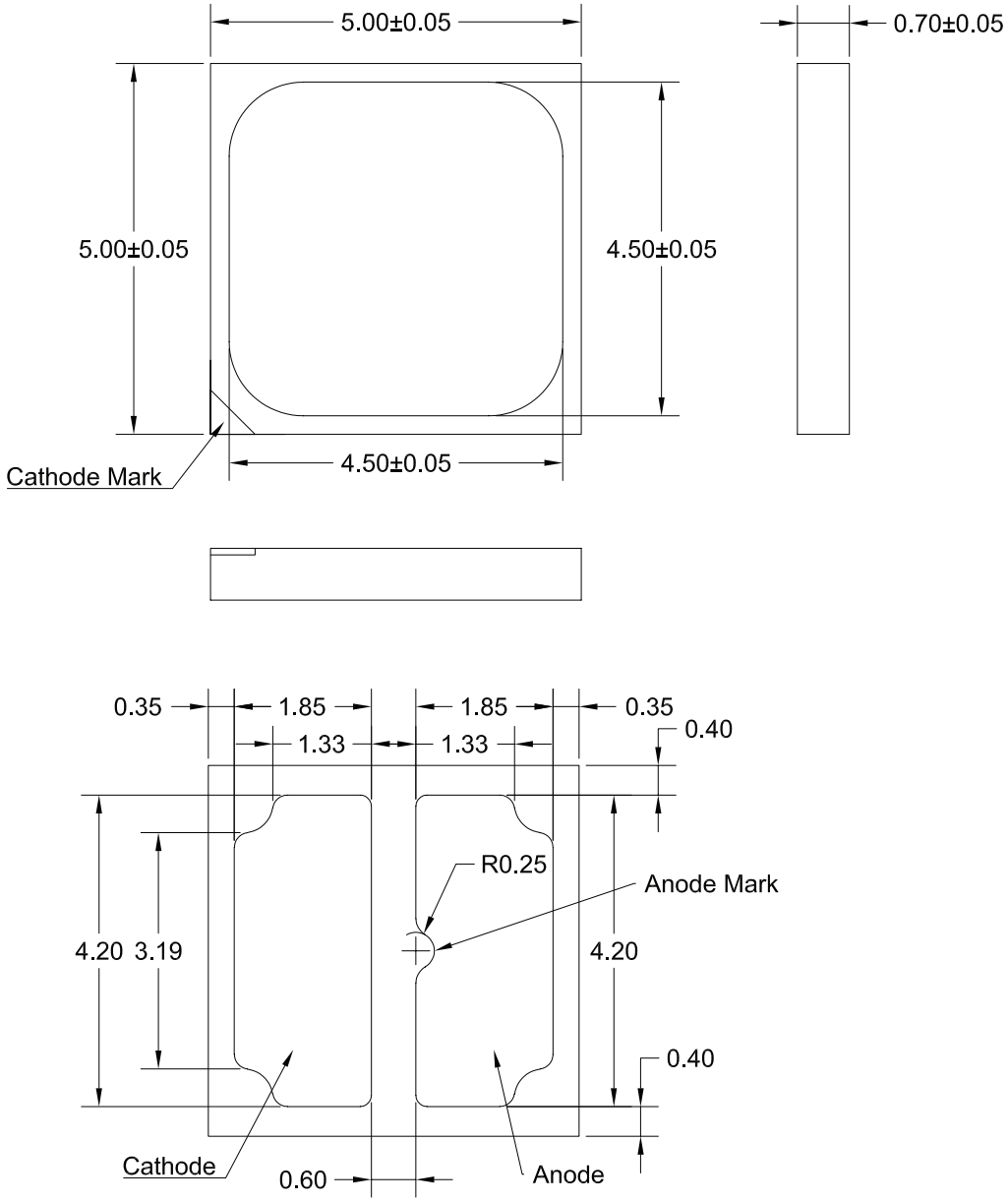

Figure 8b. Mechanical dimensions for LUXEON SunPlus 5050 Square LES

Notes for Figure 8b:
1. Drawings are not to scale.
2. All dimensions are in millimeters.

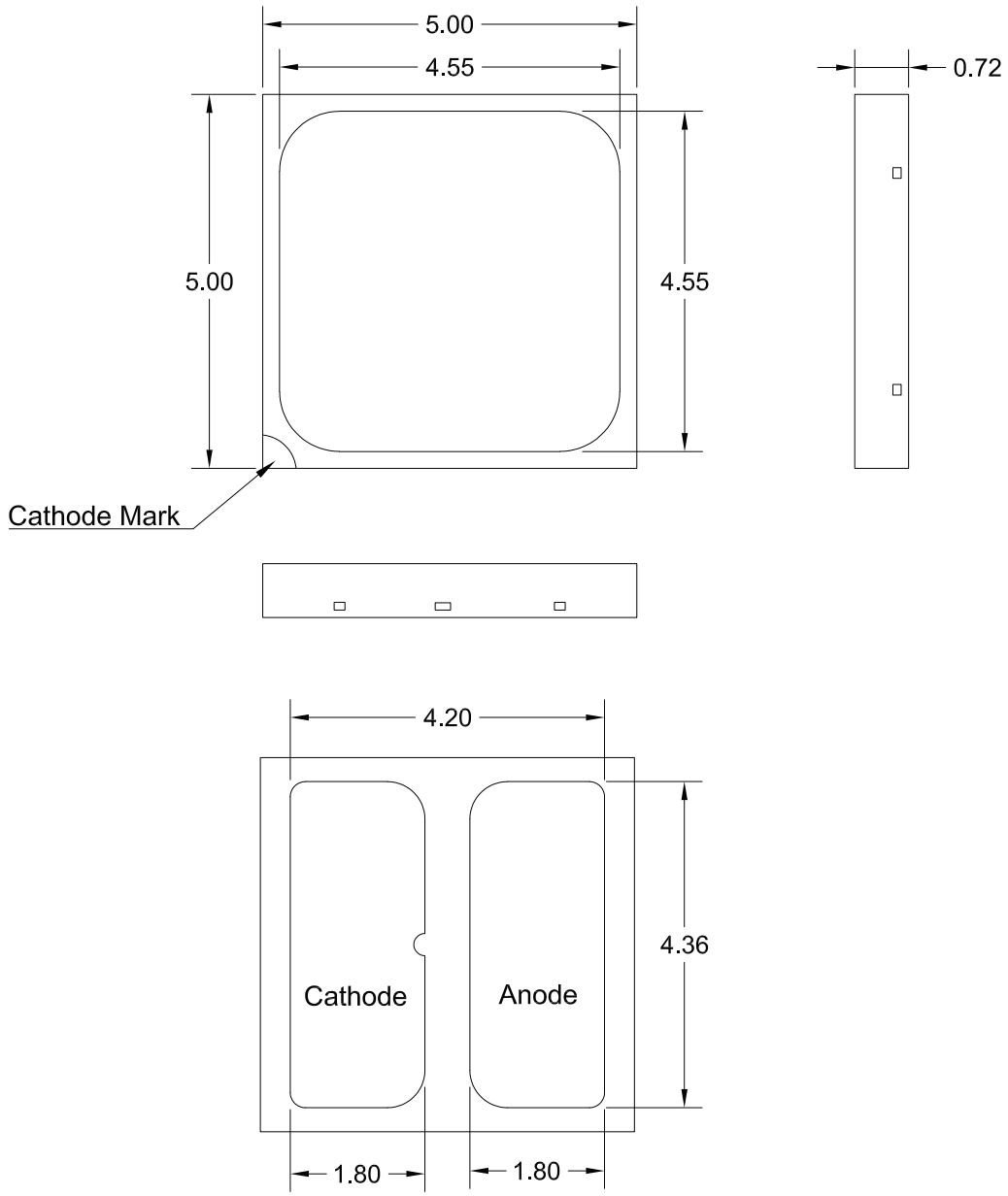

Figure 8c. Mechanical dimensions for LUXEON 5050 HE and LUXEON 5050 HE Plus

Notes for Figure 8c:
1. Drawings are not to scale.
2. All dimensions are in millimeters.

Reflow Soldering Guidelines

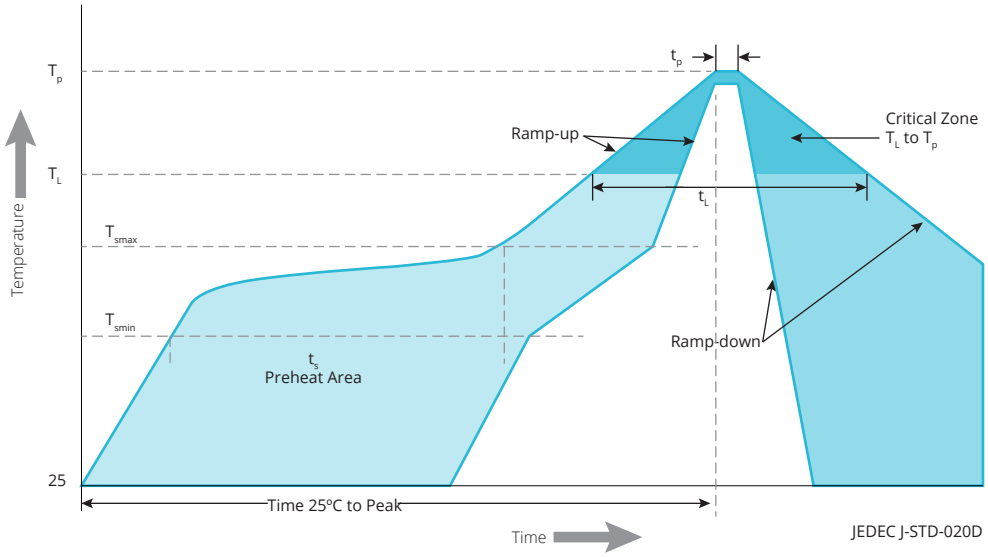

Figure 9. Visualization of the acceptable reflow temperature profile as specified in Table 8

Table 8. Reflow profile characteristics for LUXEON SunPlus 5050

PROFILE FEATURE	LEAD-FREE ASSEMBLY
Preheat Minimum Temperature (T_{smin})	150°C
Preheat Maximum Temperature (T_{smax})	200°C
Preheat Time (t_{smin} to t_{smax})	60 to 180 seconds
Ramp-Up Rate (T_L to T_p)	3°C / second maximum
Liquidous Temperature (T_L)	217°C
Time Maintained Above Temperature T_L (t_L)	60 to 150 seconds
Peak / Classification Temperature (T_p)	260°C
Time Within 5°C of Actual Peak Temperature (t_p)	20 to 40 seconds
Ramp-Down Rate (T_p to T_L)	6°C / second maximum
Time 25°C to Peak Temperature	8 minutes maximum

JEDEC Moisture Sensitivity

Table 9. Moisture sensitivity levels for LUXEON SunPlus 5050

LEVEL	FLOOR LIFE		SOAK REQUIREMENTS STANDARD	
	TIME	CONDITIONS	TIME	CONDITIONS
3	168 Hours	≤30°C / 60% RH	192 Hours +5 / -0	30°C / 60% RH

Solder Pad Design

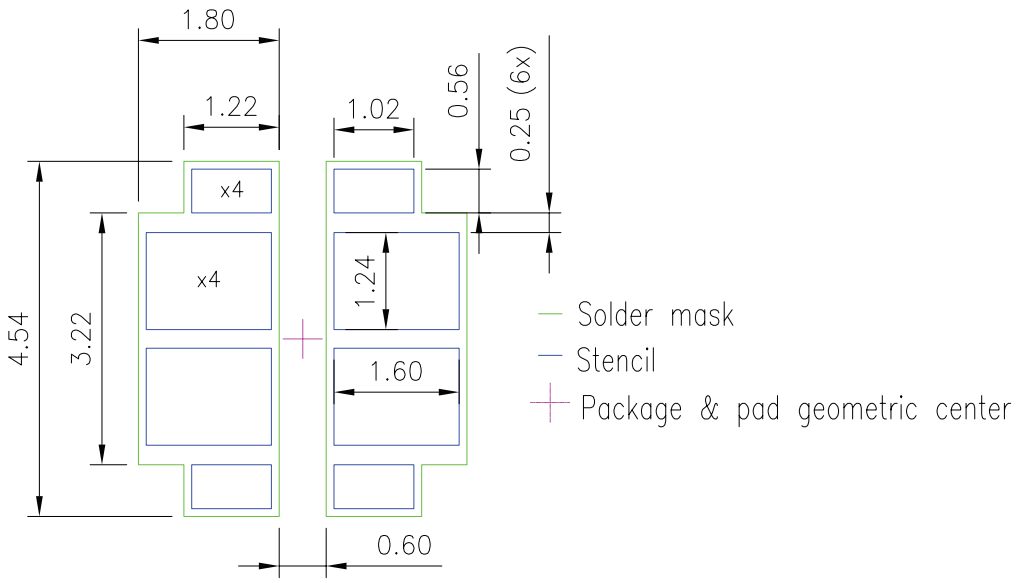

Figure 10. Optional PCB solder pad layout for LUXEON 5050 Round LES, LUXEON 5050 Square LES, LUXEON 5050 HE and LUXEON 5050 HE Plus

Notes for Figure 10:
1. Drawings are not to scale.
2. All dimensions are in millimeters.
3. For more details about recommended PCB layout design, please refer to application brief AB174.

Packaging Information

Pocket Tape Dimensions

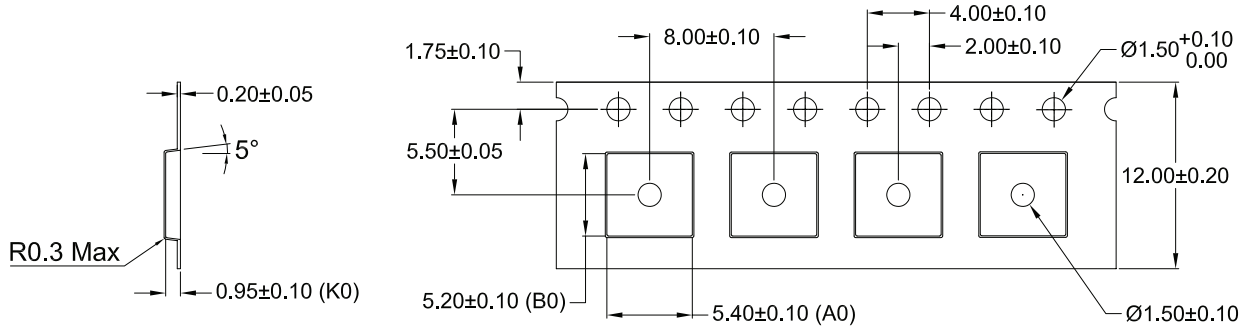

Figure 11. Pocket Tape dimensions for LUXEON 5050 Round LES, LUXEON 5050 Square LES, LUXEON 5050 HE and LUXEON 5050 HE Plus

Notes for Figure 11:
1. Drawings are not to scale.
2. All dimensions are in millimeters.

Reel Dimensions

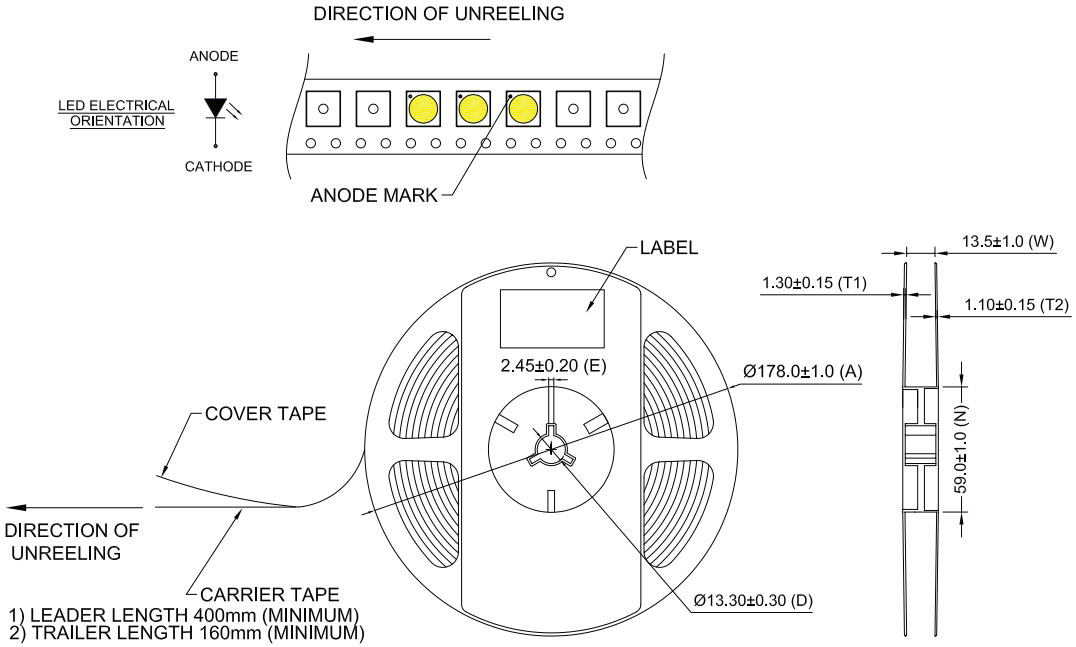

Figure 12a. Reel dimensions for LUXEON SunPlus 5050 Round LES

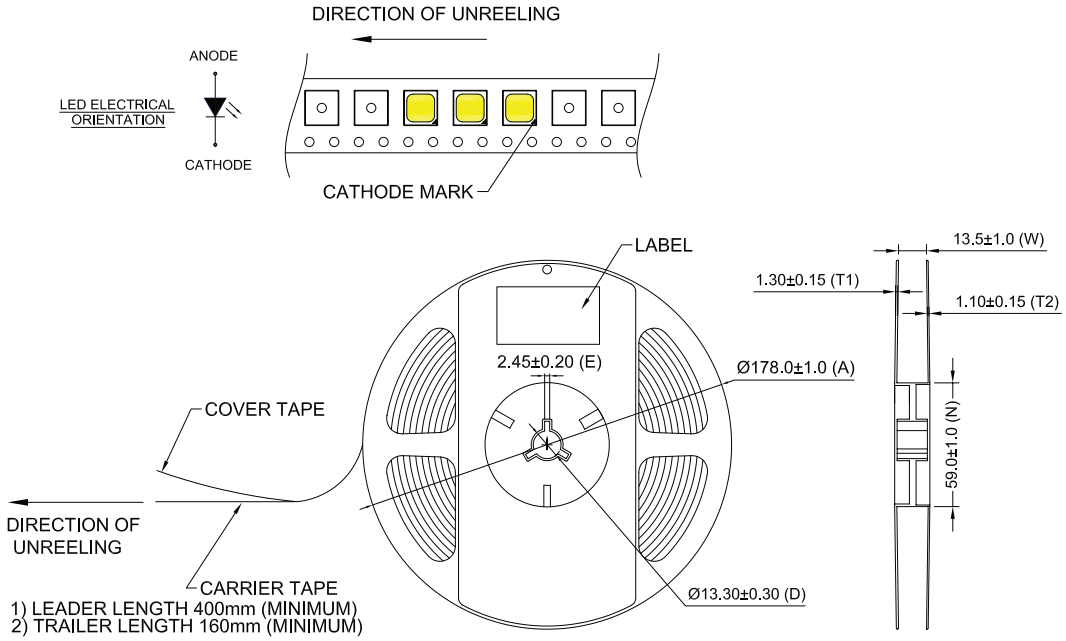

Figure 12b. Reel dimensions for LUXEON SunPlus 5050 Square LES

Notes for Figures 12a and 12b:
1. Drawings are not to scale.
2. All dimensions are in millimeters.

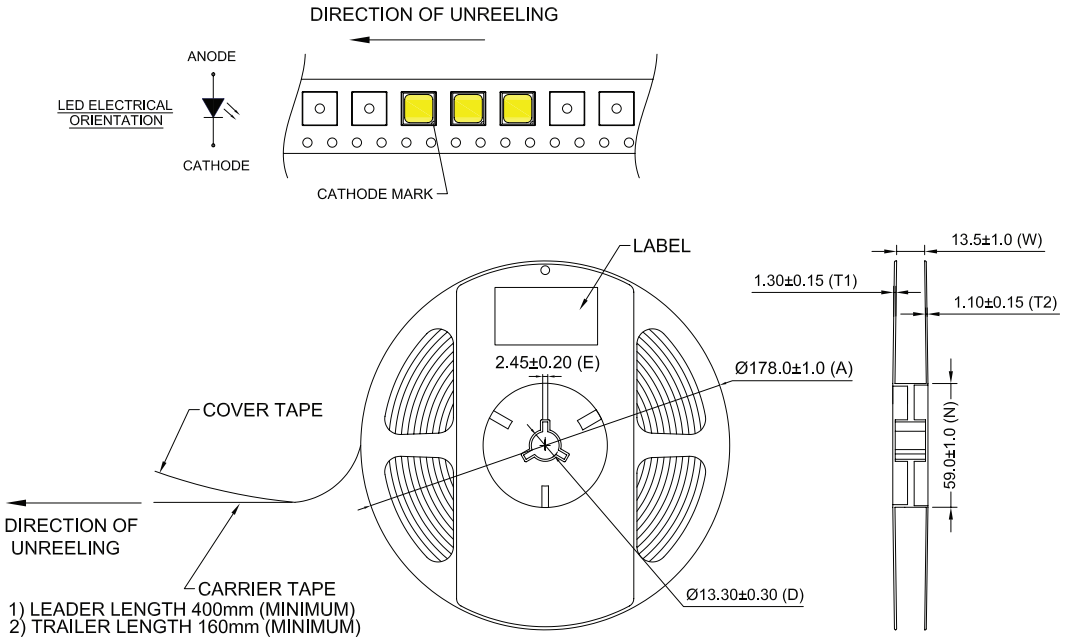

Figure 12c. Reel dimensions for LUXEON 5050 HE and LUXEON 5050 HE Plus

Notes for Figure 12c:
1. Drawings are not to scale.
2. All dimensions are in millimeters.

About Lumileds

Companies developing automotive, mobile, IoT and illumination lighting applications need a partner who can collaborate with them to push the boundaries of light. With over 100 years of inventions and industry firsts, Lumileds is a global lighting solutions company that helps customers around the world deliver differentiated solutions to gain and maintain a competitive edge. As the inventor of Xenon technology, a pioneer in halogen lighting and the leader in high performance LEDs, Lumileds builds innovation, quality and reliability into its technology, products and every customer engagement. Together with its customers, Lumileds is making the world better, safer, more beautiful—with light.

To learn more about our lighting solutions, visit lumileds.com.

LUMILEDS

©2025 Lumileds Holding B.V. All rights reserved.
LUXEON is a registered trademark of the Lumileds Holding B.V. in the United States and other countries.

lumileds.com

Neither Lumileds Holding B.V. nor its affiliates shall be liable for any kind of loss of data or any other damages, direct, indirect or consequential, resulting from the use of the provided information and data. Although Lumileds Holding B.V. and/or its affiliates have attempted to provide the most accurate information and data, the materials and services information and data are provided "as is," and neither Lumileds Holding B.V. nor its affiliates warrants or guarantees the contents and correctness of the provided information and data. Lumileds Holding B.V. and its affiliates reserve the right to make changes without notice. You as user agree to this disclaimer and user agreement with the download or use of the provided materials, information and data. A listing of Lumileds product/patent coverage may be accessed at lumileds.com/patents.

DS415 LUXEON SunPlus 5050
Product Datasheet 20251215