# LUXEON SunPlus 5050

## High efficacy and superior robustness in a high power package, enabling cost-effective system design

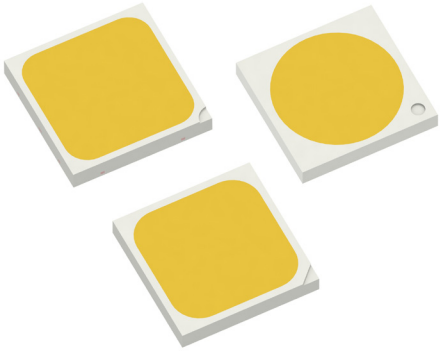

LUXEON SunPlus 5050 is a high power robust LEDs using an industry-standard 5050 surface mount package with a small Light Emitting Surface (LES). LUXEON SunPlus 5050 delivers top-rated µmol/J and PPF (µmol/s) performance and long lifetime with CCTs ranging from 2200K to 6500K and CRIs of 70, 80, and 90. It offers hot-color targeting to ensure that the LEDs are within color target at application conditions of 85°C.

| FEATURES AND BENEFITS |
| --- |
| Top-rated µmol/J and PPF (µmol/s) performance |
| Extremely reliable package design affirms long lifetime in hash environments |

| PRIMARY APPLICATIONS |
| --- |
| Horticulture |

No. E507562

DS415 LUXEON SunPlus 5050 Product Datasheet ©2025 Lumileds Holding B.V. All rights reserved.

# Table of Contents

**General Product Information** . . . . . **2**
Product Test Conditions . . . . . 2
Part Number Nomenclature . . . . . 2
Lumen Maintenance . . . . . 2
Environmental Compliance . . . . . 2
**Performance Characteristics** . . . . . **3**
Product Selection Guide . . . . . 3
Optical Characteristics . . . . . 8
Electrical and Thermal Characteristics . . . . . 8
**Absolute Maximum Ratings** . . . . . **8**
**Characteristic Curves** . . . . . **9**
Spectral Power Distribution Characteristics . . . . . 9
Light Output Characteristics . . . . . 10
Forward Current Characteristics . . . . . 13
Radiation Pattern Characteristics . . . . . 14
**Product Bin and Labeling Definitions** . . . . . **15**
Decoding Product Bin Labeling . . . . . 15
Luminous Flux Bins . . . . . 16
Color Bin Definitions . . . . . 17
Forward Voltage Bins . . . . . 18
**Mechanical Dimensions** . . . . . **19**
**Reflow Soldering Guidelines** . . . . . **22**
JEDEC Moisture Sensitivity . . . . . 22
Solder Pad Design . . . . . 23
**Packaging Information** . . . . . **23**
Pocket Tape Dimensions . . . . . 23
Reel Dimensions . . . . . 24

 ©2025 Lumileds Holding B.V. All rights reserved. 

# General Product Information

## Product Test Conditions

LUXEON SunPlus 5050 LEDs are tested with a 20ms monopulse specified below at a junction temperature, $T_j$, of 25°C. Forward voltage and luminous flux are binned at a $T_j$ of 25°C, while color is hot-targeted at a $T_j$ of 85°C.

| | | |
|---|---|---|
| 160mA | – | LUXEON SunPlus 5050 Round LES/LUXEON SunPlus 5050 HE – 24V and LUXEON 5050 Square LES – 30V |
| 640mA | – | LUXEON 5050 Round LES/LUXEON 5050 HE/LUXEON 5050 HE Plus – 6V |
| 800mA | – | LUXEON SunPlus 5050 Square LES – 6V |

## Part Number Nomenclature

Part numbers for LUXEON SunPlus 5050 follow the convention below:

L 1 5 0 – **A A A A** 5 0 **B B C C C C C**

Where:

**A A A A** – designates nominal CCT and CRI (2780=2700K, 80CRI; 3090 =3000K, 90CRI, etc., and NSC1 = Nightscape)

**B B** – designates voltage (06=6V, 24=24V, 30=30V)

**C C C C C** – designates options for product specification (00000= 5050 Round LES base part, 000S0= 5050 Square LES base part, 000H0=5050 HE base part, 00TH0=5050 HE base part with ESD Sensitivity of Class 3B. Besides, there would be custom part numbers that are derived from base part number for kitting purpose etc., and those would take the last five digits to differentiate from base part number).

Therefore, the following part number is used for a custom part number that derived from LUXEON 5050 Round LES, 4000K 70CRI, 24V:

L 1 5 0 – **4 0 7 0** 5 0 **2 4 L K H G 0**

## Lumen Maintenance

Please contact your local Sales Representative or Lumileds Technical Solutions Manager for more information about the long-term performance of this product.

## Environmental Compliance

Lumileds LLC is committed to providing environmentally friendly products to the solid-state lighting market. LUXEON SunPlus 5050 is compliant to the European Union directives on the restriction of hazardous substances in electronic equipment, namely the RoHS Directive 2011/65/EU including amendments 2015/863/EU & 2017/2102/EU and REACH Regulation (EC) 1907/2006. Lumileds LLC will not intentionally add the following restricted materials to its products: lead, mercury, cadmium, hexavalent chromium, polybrominated biphenyls (PBB) or polybrominated diphenyl ethers (PBDE).

# Performance Characteristics

## Product Selection Guide

**Table 1. Product performance of LUXEON SunPlus 5050 at rated current, $T_j$=25°C**

| PART | NOMINAL CCT [1] | MINIMUM CRI [2, 3] | PPF (umol/s) [2, 3, 4] | | PPF/W TYPICAL (umol/J) | PART NUMBER |
|---|---|---|---|---|---|---|
| | | | MINIMUM | TYPICAL | | |
| LUXEON 5050 Round LES 24V | 1800K | 70 | 6.25 | 7.01 | 1.80 | L150-1870502400000 |
| | 2200K | 70 | 7.50 | 8.41 | 2.15 | L150-2270502400000 |
| | 2700K | 70 | 7.28 | 8.57 | 2.19 | L150-2770502400000 |
| | 3000K | 70 | 7.66 | 8.72 | 2.23 | L150-3070502400000 |
| | 3500K | 70 | 8.30 | 8.87 | 2.27 | L150-3570502400000 |
| | 4000K | 70 | 7.10 | 9.06 | 2.32 | L150-4070502400000 |
| | 5000K | 70 | 8.01 | 9.01 | 2.31 | L150-5070502400000 |
| | 5700K | 70 | 8.02 | 9.00 | 2.31 | L150-5770502400000 |
| | 6500K | 70 | 8.04 | 9.02 | 2.31 | L150-6570502400000 |
| | 2200K | 80 | 6.94 | 8.01 | 2.05 | L150-2280502400000 |
| | 2700K | 80 | 7.20 | 8.44 | 2.16 | L150-2780502400000 |
| | 3000K | 80 | 7.16 | 8.62 | 2.21 | L150-3080502400000 |
| | 3500K | 80 | 5.40 | 8.63 | 2.21 | L150-3580502400000 |
| | 4000K | 80 | 7.95 | 8.75 | 2.24 | L150-4080502400000 |
| | 5000K | 80 | 7.74 | 8.81 | 2.26 | L150-5080502400000 |
| | 5700K | 80 | 7.75 | 8.74 | 2.24 | L150-5780502400000 |
| | 6500K | 80 | 8.00 | 8.75 | 2.24 | L150-6580502400000 |
| | 2700K | 90 | 6.77 | 7.59 | 1.94 | L150-2790502400000 |
| | 3000K | 90 | 6.97 | 7.75 | 1.98 | L150-3090502400000 |
| | 3500K | 90 | 7.23 | 7.90 | 2.02 | L150-3590502400000 |
| | 4000K | 90 | 7.58 | 8.17 | 2.09 | L150-4090502400000 |
| | 5000K | 90 | 7.67 | 8.13 | 2.08 | L150-5090502400000 |
| | 5700K | 90 | 7.49 | 8.08 | 2.07 | L150-5790502400000 |
| LUXEON 5050 Round LES 6V | 1800K | 70 | 6.25 | 7.01 | 1.80 | L150-1870500600000 |
| | 2200K | 70 | 7.50 | 8.41 | 2.15 | L150-2270500600000 |
| | 2700K | 70 | 7.28 | 8.57 | 2.19 | L150-2770500600000 |
| | 3000K | 70 | 7.66 | 8.72 | 2.23 | L150-3070500600000 |
| | 3500K | 70 | 8.30 | 8.87 | 2.27 | L150-3570500600000 |
| | 4000K | 70 | 7.10 | 9.06 | 2.32 | L150-4070500600000 |
| | 5000K | 70 | 8.01 | 9.01 | 2.31 | L150-5070500600000 |
| | 5700K | 70 | 8.02 | 9.00 | 2.31 | L150-5770500600000 |
| | 6500K | 70 | 8.04 | 9.02 | 2.31 | L150-6570500600000 |
| | 2200K | 80 | 6.94 | 8.01 | 2.05 | L150-2280500600000 |
| | 2700K | 80 | 7.20 | 8.44 | 2.16 | L150-2780500600000 |
| | 3000K | 80 | 7.16 | 8.62 | 2.21 | L150-3080500600000 |
| | 3500K | 80 | 5.40 | 8.63 | 2.21 | L150-3580500600000 |
| | 4000K | 80 | 7.95 | 8.75 | 2.24 | L150-4080500600000 |
| | 5000K | 80 | 7.74 | 8.81 | 2.26 | L150-5080500600000 |
| | 5700K | 80 | 7.75 | 8.74 | 2.24 | L150-5780500600000 |
| | 6500K | 80 | 8.00 | 8.75 | 2.24 | L150-6580500600000 |
| | 2700K | 90 | 6.77 | 7.59 | 1.94 | L150-2790500600000 |
| | 3000K | 90 | 6.97 | 7.75 | 1.98 | L150-3090500600000 |
| | 3500K | 90 | 7.23 | 7.90 | 2.02 | L150-3590500600000 |
| | 4000K | 90 | 7.58 | 8.17 | 2.09 | L150-4090500600000 |
| | 5000K | 90 | 7.67 | 8.13 | 2.08 | L150-5090500600000 |
| | 5700K | 90 | 7.49 | 8.08 | 2.07 | L150-5790500600000 |

Table 1 continued on next page:

1. Correlated color temperature is hot targeted at $T_j$=85°C.
2. CRI and PPF are specified at $T_j$ =25°. Typical CRI is approximately 2 points higher than the minimum CRI specified, but this is not guaranteed.
3. Lumileds maintains a tolerance of ±2 on CRI and ±7.5% on PPF.
4. PPF data is calculated from luminous flux measurements.

 ©2025 Lumileds Holding B.V. All rights reserved. 

Table 1. Product performance of LUXEON SunPlus 5050 at rated current, $T_j$=25°C, Continued.

| PART | NOMINAL CCT [1] | MINIMUM CRI [2, 3] | PPF (umol/s) [2, 3, 4] | | PPF/W TYPICAL (umol/J) | PART NUMBER |
|---|---|---|---|---|---|---|
| | | | MINIMUM | TYPICAL | | |
| LUXEON 5050 Square LES 30V | 1800K | 70 | 9.03 | 9.70 | 1.99 | L150-18705030000S0 |
| | 2200K | 70 | 9.03 | 10.30 | 2.11 | L150-22705030000S0 |
| | 2700K | 70 | 9.36 | 10.60 | 2.17 | L150-27705030000S0 |
| | 3000K | 70 | 9.71 | 10.70 | 2.19 | L150-30705030000S0 |
| | 3500K | 70 | 9.53 | 10.80 | 2.21 | L150-35705030000S0 |
| | 4000K | 70 | 9.68 | 10.90 | 2.23 | L150-40705030000S0 |
| | 5000K | 70 | 9.69 | 11.00 | 2.25 | L150-50705030000S0 |
| | 5700K | 70 | 9.98 | 11.10 | 2.27 | L150-57705030000S0 |
| | 6500K | 70 | 9.56 | 11.00 | 2.25 | L150-65705030000S0 |
| | 2200K | 80 | 9.23 | 9.85 | 2.02 | L150-22805030000S0 |
| | 2700K | 80 | 9.29 | 9.97 | 2.04 | L150-27805030000S0 |
| | 3000K | 80 | 9.70 | 10.24 | 2.10 | L150-30805030000S0 |
| | 3500K | 80 | 9.25 | 10.12 | 2.07 | L150-35805030000S0 |
| | 4000K | 80 | 9.87 | 10.52 | 2.16 | L150-40805030000S0 |
| | 5000K | 80 | 9.93 | 10.66 | 2.18 | L150-50805030000S0 |
| | 5700K | 80 | 9.76 | 10.67 | 2.19 | L150-57805030000S0 |
| | 6500K | 80 | 10.26 | 10.59 | 2.17 | L150-65805030000S0 |
| | 2700K | 90 | 9.55 | 9.82 | 2.01 | L150-27905030000S0 |
| | 3000K | 90 | 9.48 | 10.09 | 2.07 | L150-30905030000S0 |
| | 3500K | 90 | 9.48 | 10.06 | 2.06 | L150-35905030000S0 |
| | 4000K | 90 | 9.81 | 10.16 | 2.08 | L150-40905030000S0 |
| | 5000K | 90 | 9.88 | 10.23 | 2.10 | L150-50905030000S0 |
| | 5700K | 90 | 9.87 | 10.28 | 2.11 | L150-57905030000S0 |
| LUXEON 5050 Square LES 6V | 1800K | 70 | 9.03 | 9.70 | 1.99 | L150-18705006000S0 |
| | 2200K | 70 | 9.03 | 10.30 | 2.11 | L150-22705006000S0 |
| | 2700K | 70 | 9.36 | 10.60 | 2.17 | L150-27705006000S0 |
| | 3000K | 70 | 9.71 | 10.70 | 2.19 | L150-30705006000S0 |
| | 3500K | 70 | 9.53 | 10.80 | 2.21 | L150-35705006000S0 |
| | 4000K | 70 | 9.68 | 10.90 | 2.23 | L150-40705006000S0 |
| | 5000K | 70 | 9.69 | 11.00 | 2.25 | L150-50705006000S0 |
| | 5700K | 70 | 9.98 | 11.10 | 2.27 | L150-57705006000S0 |
| | 6500K | 70 | 9.56 | 11.00 | 2.25 | L150-65705006000S0 |
| | 2200K | 80 | 9.23 | 9.85 | 2.02 | L150-22805006000S0 |
| | 2700K | 80 | 9.29 | 9.97 | 2.04 | L150-27805006000S0 |
| | 3000K | 80 | 9.70 | 10.24 | 2.10 | L150-30805006000S0 |
| | 3500K | 80 | 9.25 | 10.12 | 2.07 | L150-35805006000S0 |
| | 4000K | 80 | 9.87 | 10.52 | 2.16 | L150-40805006000S0 |
| | 5000K | 80 | 9.93 | 10.66 | 2.18 | L150-50805006000S0 |
| | 5700K | 80 | 9.76 | 10.67 | 2.19 | L150-57805006000S0 |
| | 6500K | 80 | 10.26 | 10.59 | 2.17 | L150-65805006000S0 |
| | 2700K | 90 | 9.55 | 9.82 | 2.01 | L150-27905006000S0 |
| | 3000K | 90 | 9.48 | 10.09 | 2.07 | L150-30905006000S0 |
| | 3500K | 90 | 9.48 | 10.06 | 2.06 | L150-35905006000S0 |
| | 4000K | 90 | 9.81 | 10.16 | 2.08 | L150-40905006000S0 |
| | 5000K | 90 | 9.88 | 10.23 | 2.10 | L150-50905006000S0 |
| | 5700K | 90 | 9.87 | 10.28 | 2.11 | L150-57905006000S0 |

Table 1 continued on next page:

1. Correlated color temperature is hot targeted at $T_j$=85°C.
2. CRI and PPF are specified at $T_j$ =25°. Typical CRI is approximately 2 points higher than the minimum CRI specified, but this is not guaranteed.
3. Lumileds maintains a tolerance of ±2 on CRI and ±7.5% on PPF.
4. PPF data is calculated from luminous flux measurements.

 ©2025 Lumileds Holding B.V. All rights reserved. 

Table 1. Product performance of LUXEON SunPlus 5050 at rated current, $T_j$=25°C, Continued.

| PART | NOMINAL CCT [1] | MINIMUM CRI [2, 3] | PPF (umol/s) [2, 3, 4] | | PPF/W TYPICAL (umol/J) | PART NUMBER |
|---|---|---|---|---|---|---|
| | | | MINIMUM | TYPICAL | | |
| LUXEON 5050 HE 24V | 1800K | 70 | 7.30 | 8.04 | 2.08 | L150-18705024000H0 |
| | 2200K | 70 | 8.06 | 8.67 | 2.24 | L150-22705024000H0 |
| | 2700K | 70 | 8.38 | 8.94 | 2.31 | L150-27705024000H0 |
| | 3000K | 70 | 8.29 | 9.09 | 2.35 | L150-30705024000H0 |
| | 3500K | 70 | 8.21 | 9.28 | 2.40 | L150-35705024000H0 |
| | 4000K | 70 | 8.42 | 9.37 | 2.42 | L150-40705024000H0 |
| | 5000K | 70 | 8.61 | 9.47 | 2.45 | L150-50705024000H0 |
| | 5700K | 70 | 9.00 | 9.51 | 2.46 | L150-57705024000H0 |
| | 6500K | 70 | 8.58 | 9.62 | 2.48 | L150-65705024000H0 |
| | 2200K | 80 | 7.51 | 8.15 | 2.10 | L150-22805024000H0 |
| | 2700K | 80 | 7.84 | 8.52 | 2.20 | L150-27805024000H0 |
| | 3000K | 80 | 7.66 | 8.73 | 2.25 | L150-30805024000H0 |
| | 3500K | 80 | 8.09 | 8.92 | 2.30 | L150-35805024000H0 |
| | 4000K | 80 | 8.18 | 8.97 | 2.32 | L150-40805024000H0 |
| | 5000K | 80 | 8.42 | 9.01 | 2.33 | L150-50805024000H0 |
| | 5700K | 80 | 8.29 | 9.07 | 2.34 | L150-57805024000H0 |
| | 6500K | 80 | 8.58 | 9.11 | 2.35 | L150-65805024000H0 |
| | 2700K | 90 | 7.73 | 8.20 | 2.12 | L150-27905024000H0 |
| | 3000K | 90 | 7.92 | 8.28 | 2.14 | L150-30905024000H0 |
| | 3500K | 90 | 8.11 | 8.42 | 2.18 | L150-35905024000H0 |
| | 4000K | 90 | 8.14 | 8.58 | 2.22 | L150-40905024000H0 |
| | 5000K | 90 | 8.36 | 8.77 | 2.26 | L150-50905024000H0 |
| | 5700K | 90 | 8.31 | 8.79 | 2.27 | L150-57905024000H0 |
| | 1800K | 70 | 7.30 | 8.00 | 2.07 | L150-1870502400TH0 |
| | 2200K | 70 | 8.06 | 8.63 | 2.23 | L150-2270502400TH0 |
| | 2700K | 70 | 8.38 | 8.90 | 2.30 | L150-2770502400TH0 |
| | 3000K | 70 | 8.29 | 9.04 | 2.34 | L150-3070502400TH0 |
| | 3500K | 70 | 8.21 | 9.23 | 2.38 | L150-3570502400TH0 |
| | 4000K | 70 | 8.42 | 9.32 | 2.41 | L150-4070502400TH0 |
| | 5000K | 70 | 8.61 | 9.42 | 2.43 | L150-5070502400TH0 |
| | 5700K | 70 | 9.00 | 9.46 | 2.44 | L150-5770502400TH0 |
| | 6500K | 70 | 8.58 | 9.57 | 2.47 | L150-6570502400TH0 |
| | 2200K | 80 | 7.51 | 8.09 | 2.09 | L150-2280502400TH0 |
| | 2700K | 80 | 7.84 | 8.40 | 2.17 | L150-2780502400TH0 |
| | 3000K | 80 | 7.66 | 8.62 | 2.23 | L150-3080502400TH0 |
| | 3500K | 80 | 8.09 | 8.83 | 2.28 | L150-3580502400TH0 |
| | 4000K | 80 | 8.18 | 8.98 | 2.32 | L150-4080502400TH0 |
| | 5000K | 80 | 8.42 | 9.03 | 2.33 | L150-5080502400TH0 |
| | 5700K | 80 | 8.29 | 9.05 | 2.34 | L150-5780502400TH0 |
| | 6500K | 80 | 8.58 | 9.09 | 2.35 | L150-6580502400TH0 |
| | 2700K | 90 | 7.73 | 8.20 | 2.12 | L150-2790502400TH0 |
| | 3000K | 90 | 7.92 | 8.28 | 2.14 | L150-3090502400TH0 |
| | 3500K | 90 | 8.11 | 8.42 | 2.18 | L150-3590502400TH0 |
| | 4000K | 90 | 8.14 | 8.58 | 2.22 | L150-4090502400TH0 |
| | 5000K | 90 | 8.36 | 8.77 | 2.26 | L150-5090502400TH0 |
| | 5700K | 90 | 8.31 | 8.79 | 2.27 | L150-5790502400TH0 |

Table 1 continued on next page:

1. Correlated color temperature is hot targeted at $T_j$=85°C.
2. CRI and PPF are specified at $T_j$ =25°. Typical CRI is approximately 2 points higher than the minimum CRI specified, but this is not guaranteed.
3. Lumileds maintains a tolerance of ±2 on CRI and ±7.5% on PPF.
4. PPF data is calculated from luminous flux measurements.

 ©2025 Lumileds Holding B.V. All rights reserved. 

Table 1. Product performance of LUXEON SunPlus 5050 at rated current, $T_j$=25°C, Continued.

| PART | NOMINAL CCT [1] | MINIMUM CRI [2, 3] | PPF (umol/s) [2, 3, 4] | | PPF/W TYPICAL (umol/J) | PART NUMBER |
|---|---|---|---|---|---|---|
| | | | MINIMUM | TYPICAL | | |
| LUXEON 5050 HE 6V | 1800K | 70 | 7.30 | 8.04 | 2.08 | L150-18705006000H0 |
| | 2200K | 70 | 8.06 | 8.67 | 2.24 | L150-22705006000H0 |
| | 2700K | 70 | 8.38 | 8.94 | 2.31 | L150-27705006000H0 |
| | 3000K | 70 | 8.29 | 9.09 | 2.35 | L150-30705006000H0 |
| | 3500K | 70 | 8.21 | 9.28 | 2.40 | L150-35705006000H0 |
| | 4000K | 70 | 8.42 | 9.37 | 2.42 | L150-40705006000H0 |
| | 5000K | 70 | 8.61 | 9.47 | 2.45 | L150-50705006000H0 |
| | 5700K | 70 | 9.00 | 9.51 | 2.46 | L150-57705006000H0 |
| | 6500K | 70 | 8.58 | 9.62 | 2.48 | L150-65705006000H0 |
| | 2200K | 80 | 7.51 | 8.15 | 2.10 | L150-22805006000H0 |
| | 2700K | 80 | 7.84 | 8.52 | 2.20 | L150-27805006000H0 |
| | 3000K | 80 | 7.66 | 8.73 | 2.25 | L150-30805006000H0 |
| | 3500K | 80 | 8.09 | 8.92 | 2.30 | L150-35805006000H0 |
| | 4000K | 80 | 8.18 | 8.97 | 2.32 | L150-40805006000H0 |
| | 5000K | 80 | 8.42 | 9.01 | 2.33 | L150-50805006000H0 |
| | 5700K | 80 | 8.29 | 9.07 | 2.34 | L150-57805006000H0 |
| | 6500K | 80 | 8.58 | 9.11 | 2.35 | L150-65805006000H0 |
| | 2700K | 90 | 7.73 | 8.20 | 2.12 | L150-27905006000H0 |
| | 3000K | 90 | 7.92 | 8.28 | 2.14 | L150-30905006000H0 |
| | 3500K | 90 | 8.11 | 8.42 | 2.18 | L150-35905006000H0 |
| | 4000K | 90 | 8.14 | 8.58 | 2.22 | L150-40905006000H0 |
| | 5000K | 90 | 8.36 | 8.77 | 2.26 | L150-50905006000H0 |
| | 5700K | 90 | 8.31 | 8.79 | 2.27 | L150-57905006000H0 |
| | 1800K | 70 | 7.30 | 8.00 | 2.07 | L150-1870500600TH0 |
| | 2200K | 70 | 8.06 | 8.63 | 2.23 | L150-2270500600TH0 |
| | 2700K | 70 | 8.38 | 8.90 | 2.30 | L150-2770500600TH0 |
| | 3000K | 70 | 8.29 | 9.04 | 2.34 | L150-3070500600TH0 |
| | 3500K | 70 | 8.21 | 9.23 | 2.38 | L150-3570500600TH0 |
| | 4000K | 70 | 8.42 | 9.32 | 2.41 | L150-4070500600TH0 |
| | 5000K | 70 | 8.61 | 9.42 | 2.43 | L150-5070500600TH0 |
| | 5700K | 70 | 9.00 | 9.46 | 2.44 | L150-5770500600TH0 |
| | 6500K | 70 | 8.58 | 9.57 | 2.47 | L150-6570500600TH0 |
| | 2200K | 80 | 7.51 | 8.09 | 2.09 | L150-2280500600TH0 |
| | 2700K | 80 | 7.84 | 8.40 | 2.17 | L150-2780500600TH0 |
| | 3000K | 80 | 7.66 | 8.62 | 2.23 | L150-3080500600TH0 |
| | 3500K | 80 | 8.09 | 8.83 | 2.28 | L150-3580500600TH0 |
| | 4000K | 80 | 8.18 | 8.98 | 2.32 | L150-4080500600TH0 |
| | 5000K | 80 | 8.42 | 9.03 | 2.33 | L150-5080500600TH0 |
| | 5700K | 80 | 8.29 | 9.05 | 2.34 | L150-5780500600TH0 |
| | 6500K | 80 | 8.58 | 9.09 | 2.35 | L150-6580500600TH0 |
| | 2700K | 90 | 7.73 | 8.20 | 2.12 | L150-2790500600TH0 |
| | 3000K | 90 | 7.92 | 8.28 | 2.14 | L150-3090500600TH0 |
| | 3500K | 90 | 8.11 | 8.42 | 2.18 | L150-3590500600TH0 |
| | 4000K | 90 | 8.14 | 8.58 | 2.22 | L150-4090500600TH0 |
| | 5000K | 90 | 8.36 | 8.77 | 2.26 | L150-5090500600TH0 |
| | 5700K | 90 | 8.31 | 8.79 | 2.27 | L150-5790500600TH0 |

Notes for Table 1:
1. Correlated color temperature is hot targeted at $T_j$=85°C.
2. CRI and PPF are specified at $T_j$ =25°. Typical CRI is approximately 2 points higher than the minimum CRI specified, but this is not guaranteed.
3. Lumileds maintains a tolerance of ±2 on CRI and ±7.5% on PPF.
4. PPF data is calculated from luminous flux measurements.

 ©2025 Lumileds Holding B.V. All rights reserved. 

**Table 1. Product performance of LUXEON SunPlus 5050 at rated current, $T_j$=25°C, Continued.**

| PART | NOMINAL CCT [1] | MINIMUM CRI [2, 3] | PPF (umol/s) [2, 3, 4] | | PPF/W TYPICAL (umol/J) | PART NUMBER |
|---|---|---|---|---|---|---|
| | | | MINIMUM | TYPICAL | | |
| LUXEON 5050 HE Plus - 6V | 1800K | 70 | 8.15 | 8.41 | 2.25 | L150-1870500600HH0 |
| | 2200K | 70 | 8.62 | 9.07 | 2.42 | L150-2270500600HH0 |
| | 2700K | 70 | 8.65 | 9.26 | 2.47 | L150-2770500600HH0 |
| | 3000K | 70 | 8.94 | 9.31 | 2.49 | L150-3070500600HH0 |
| | 3500K | 70 | 8.74 | 9.36 | 2.50 | L150-3570500600HH0 |
| | 4000K | 70 | 9.15 | 9.61 | 2.57 | L150-4070500600HH0 |
| | 5000K | 70 | 9.27 | 9.68 | 2.59 | L150-5070500600HH0 |
| | 5700K | 70 | 9.18 | 9.62 | 2.57 | L150-5770500600HH0 |
| | 6500K | 70 | 9.30 | 9.81 | 2.62 | L150-6570500600HH0 |
| | 2200K | 80 | 7.79 | 8.36 | 2.23 | L150-2280500600HH0 |
| | 2700K | 80 | 8.49 | 8.93 | 2.39 | L150-2780500600HH0 |
| | 3000K | 80 | 8.29 | 8.98 | 2.40 | L150-3080500600HH0 |
| | 3500K | 80 | 8.75 | 9.12 | 2.44 | L150-3580500600HH0 |
| | 4000K | 80 | 8.98 | 9.36 | 2.50 | L150-4080500600HH0 |
| | 5000K | 80 | 9.08 | 9.37 | 2.50 | L150-5080500600HH0 |
| | 5700K | 80 | 8.84 | 9.39 | 2.51 | L150-5780500600HH0 |
| | 6500K | 80 | 8.84 | 9.50 | 2.54 | L150-6580500600HH0 |

Notes for Table 1:
1. Correlated color temperature is hot targeted at $T_j$=85°C.
2. CRI and PPF are specified at $T_j$ =25°. Typical CRI is approximately 2 points higher than the minimum CRI specified, but this is not guaranteed.
3. Lumileds maintains a tolerance of ±2 on CRI and ±7.5% on PPF.
4. PPF data is calculated from luminous flux measurements.

 ©2025 Lumileds Holding B.V. All rights reserved. 

# Optical Characteristics

**Table 2. Optical characteristics for LUXEON SunPlus 5050 at test current, $T_j$=25°C**

| PART NUMBER | TYPICAL TOTAL INCLUDED ANGLE [1] | TYPICAL VIEWING ANGLE [2] |
|---|---|---|
| L150-xxxx50xx000x0 | 138° | 116° |

Notes for Table 2:
1. Total angle at which 90% of total luminous flux is captured.
2. Viewing angle is the off axis angle from the LED centerline where the luminous intensity is ½ of the peak value.

# Electrical and Thermal Characteristics

**Table 3. Electrical and thermal characteristics for LUXEON SunPlus 5050 at test current, $T_j$=25°C**

| PART | FORWARD VOLTAGE [1] ($V_f$) | | | TYPICAL TEMPERATURE COEFFICIENT OF FORWARD VOLTAGE [2] (mV/°C) | TYPICAL THERMAL RESISTANCE—JUNCTION TO SOLDER PAD (°C/W) |
|---|---|---|---|---|---|
| | MINIMUM | TYPICAL | MAXIMUM | | |
| LUXEON 5050 Round LES - 24V | 23.5 | 24.4 | 26.5 | -12 | 2.4 |
| LUXEON 5050 Round LES - 6V | 5.8 | 6.1 | 6.6 | -3 | 2.4 |
| LUXEON 5050 Square LES - 30V | 29.0 | 30.5 | 32.0 | -15 | 1.4 |
| LUXEON 5050 Square LES - 6V | 5.8 | 6.1 | 6.6 | -3 | 1.4 |
| LUXEON 5050 HE - 24V | 22.7 | 24.2 | 25.8 | -12 | 2.2 |
| LUXEON 5050 HE - 6V | 5.6 | 6.05 | 6.4 | -3 | 2.2 |
| LUXEON 5050 HE Plus - 6V | 5.6 | 5.85 | 6.1 | -3 | 1.1 |

Notes for Table 3:
1. Lumileds maintains a tolerance of ±0.1V on forward voltage measurements.
2. Measured between 25°C and 85°C.

# Absolute Maximum Ratings

**Table 4. Absolute maximum ratings for LUXEON SunPlus 5050**

| PARAMETER | MAXIMUM PERFORMANCE |
|---|---|
| DC Forward Current [1, 2] | 240mA for LUXEON 5050 Round LES - 24V<br>800mA for LUXEON 5050 Round LES - 6V<br>240mA for LUXEON 5050 Square LES - 30V<br>1000mA for LUXEON 5050 Square LES - 6V<br>240mA for LUXEON 5050 HE - 24V<br>800mA for LUXEON 5050 HE - 6V<br>1200mA for LUXEON 5050 HE Plus - 6V |
| Peak Pulsed Forward Current [1, 3] | 300mA for LUXEON 5050 Round LES - 24V<br>1000mA for LUXEON 5050 Round LES - 6V<br>300mA for LUXEON 5050 Square LES - 30V<br>1250mA for LUXEON 5050 Square LES - 6V<br>300mA for LUXEON 5050 HE - 24V<br>1000mA for LUXEON 5050 HE - 6V<br>1500mA for LUXEON 5050 HE Plus - 6V |
| LED Junction Temperature [1] (DC & Pulse) | 125°C |
| ESD Sensitivity (ANSI/ESDA/JEDEC JS-001-2012) | Class 3B for L150-xxxx50xx00TH0<br>Class 2 for the rest |
| Operating Case Temperature [1] | -40°C to 105°C |
| LED Storage Temperature | -40°C to 105°C |
| Allowable Reflow Cycles | 3 |
| Reverse Voltage ($V_{reverse}$) | LUXEON LEDs are not designed to be driven in reverse bias |

Notes for Table 4:
1. Proper current derating must be observed to maintain the junction temperature below the maximum allowable junction temperature.
2. Residual periodic variations due to power conversion from alternating current (AC) to direct current (DC), also called "ripple," are acceptable if the following conditions are met:
   – The frequency of the ripple current is 100Hz or higher
   – The average current for each cycle does not exceed the maximum allowable DC forward current
   – The maximum amplitude of the ripple does not exceed the maximum peak pulsed forward current
3. At ≤50% duty cycle with pulse width of 5ms.

 ©2025 Lumileds Holding B.V. All rights reserved. 

# Characteristic Curves

## Spectral Power Distribution Characteristics

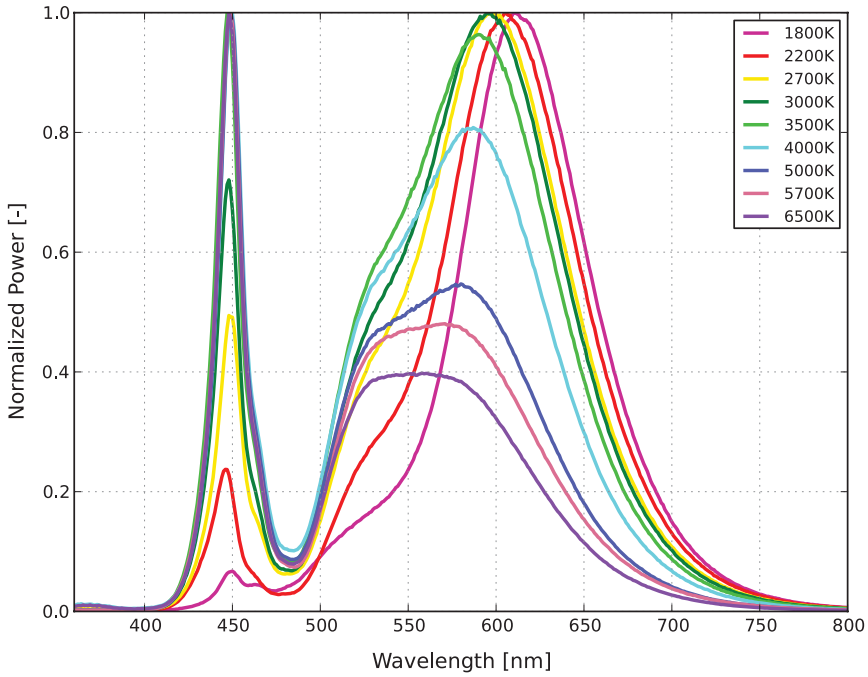


Figure 1a. Typical normalized power vs. wavelength for 70CRI LUXEON 5050 at test current, $T_j$=25°C

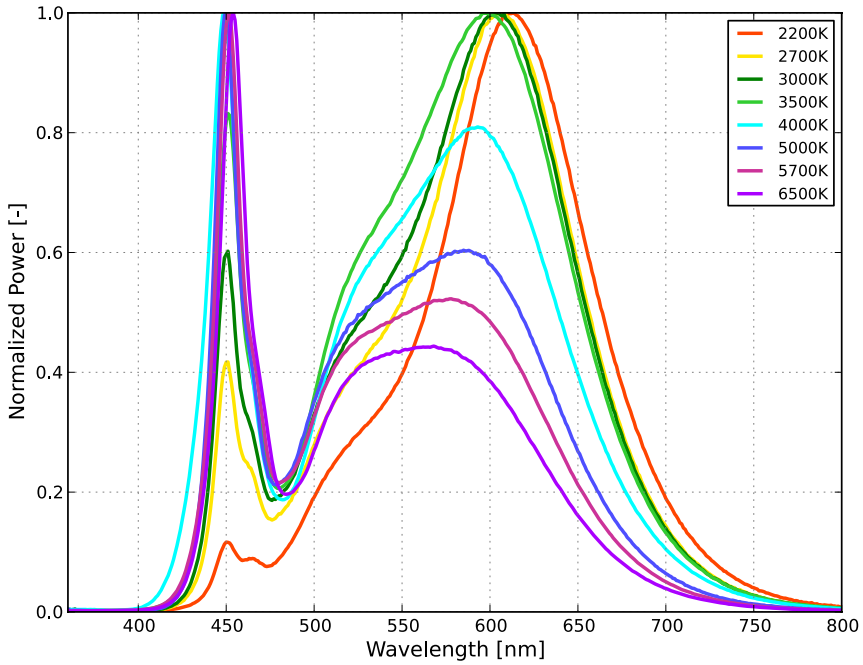


Figure 1b. Typical normalized power vs. wavelength for 80CRI LUXEON 5050 at test current, $T_j$=25°C

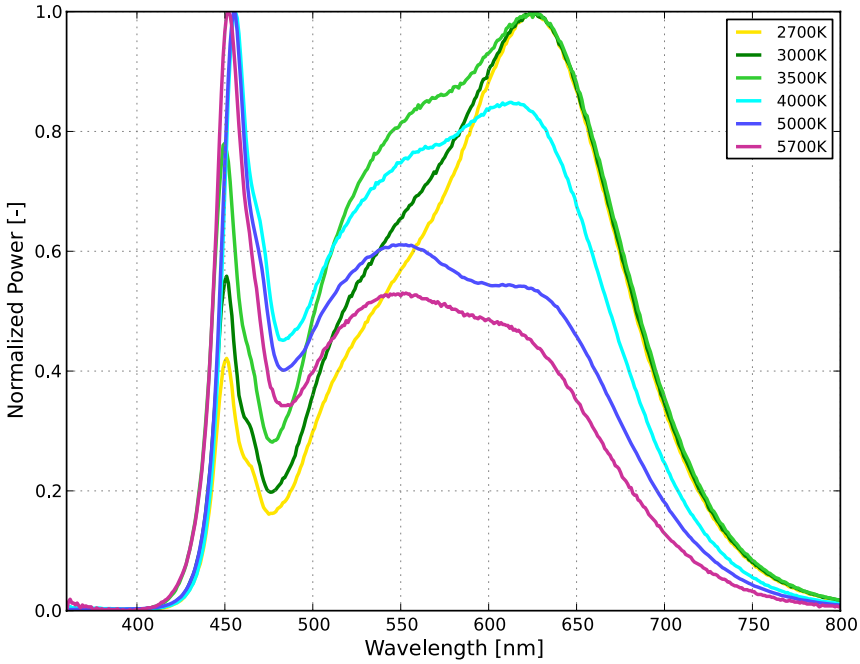


Figure 1c. Typical normalized power vs. wavelength for 90CRI LUXEON 5050 at test current, $T_j$=25°C

## Light Output Characteristics

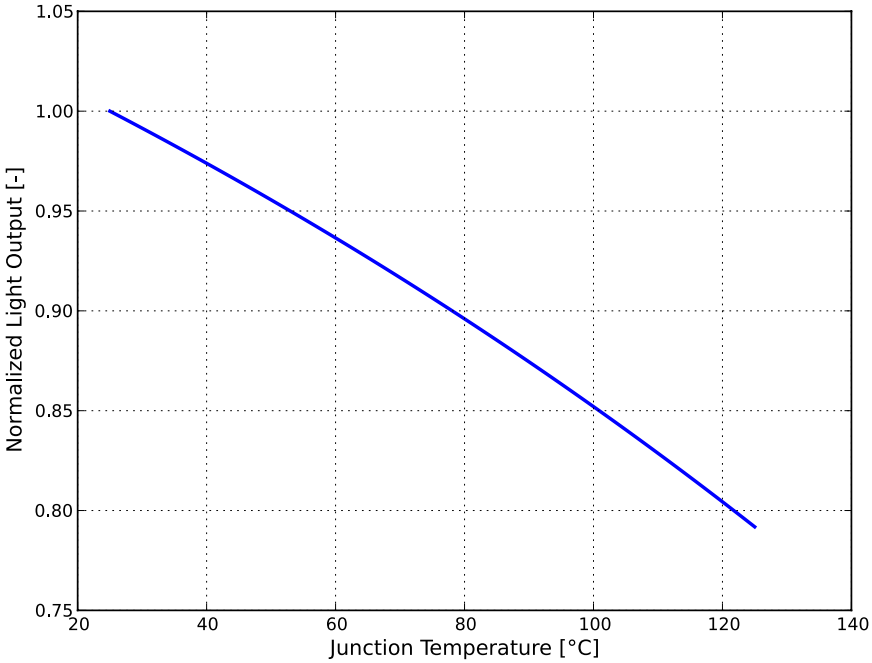


Figure 2. Typical normalized light output vs. junction temperature for all LUXEON 5050 at test current

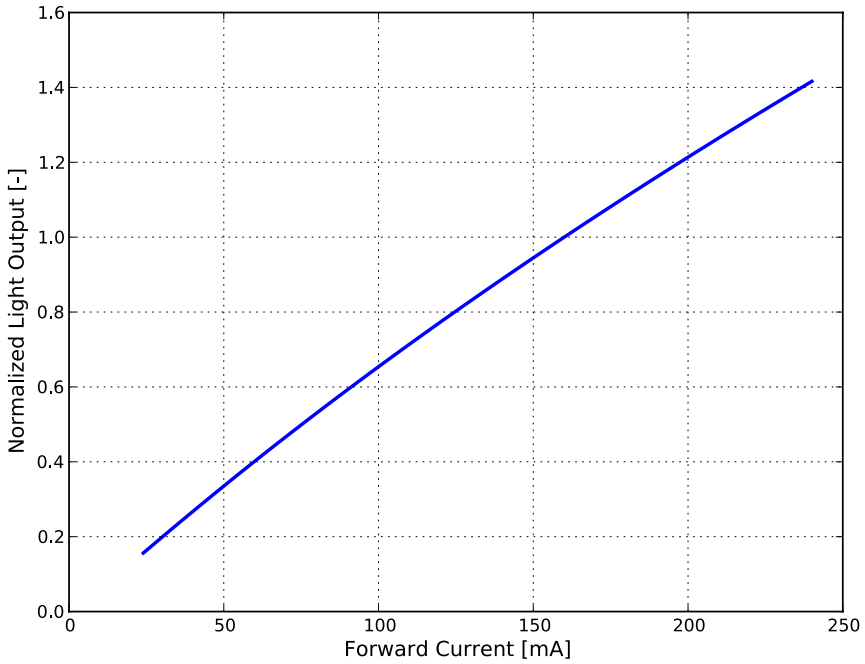


**Figure 3a. Typical normalized light output vs. forward current for LUXEON 5050 Round LES - 24V, LUXEON 5050 HE - 24V and LUXEON 5050 Square LES - 30V, $T_j$=25°C**

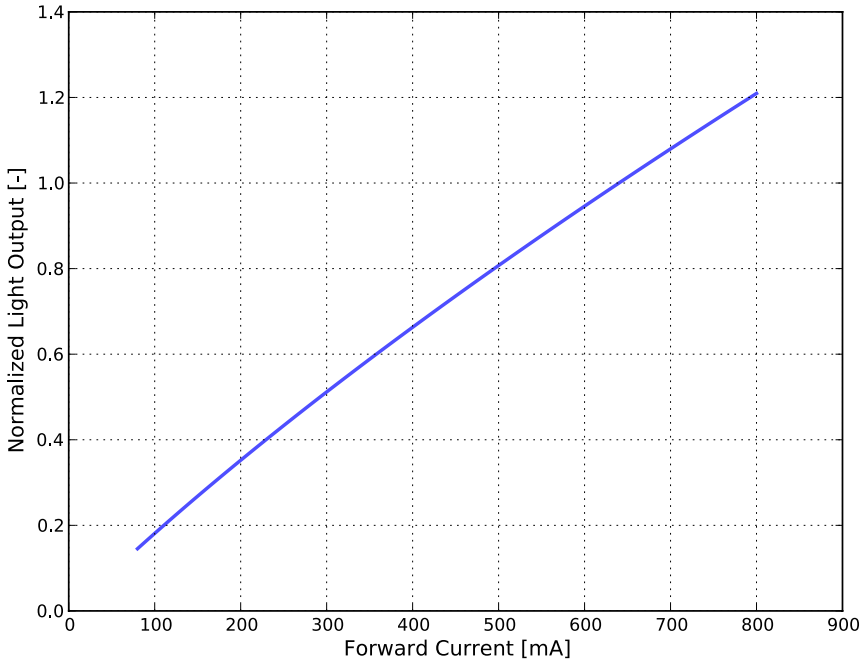


**Figure 3b. Typical normalized light output vs. forward current for LUXEON 5050 Round LES - 6V, LUXEON 5050 HE - 6V and LUXEON 5050 HE Plus - 6V, $T_j$=25°C**

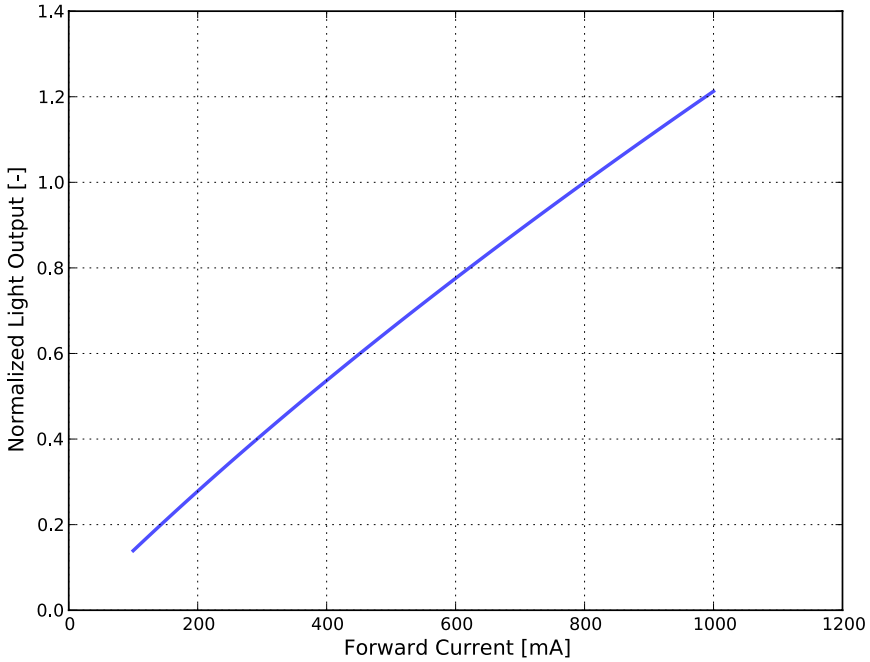


**Figure 3c. Typical normalized light output vs. forward current for LUXEON 5050 Square LES - 6V, $T_j$=25°C**

## Forward Current Characteristics

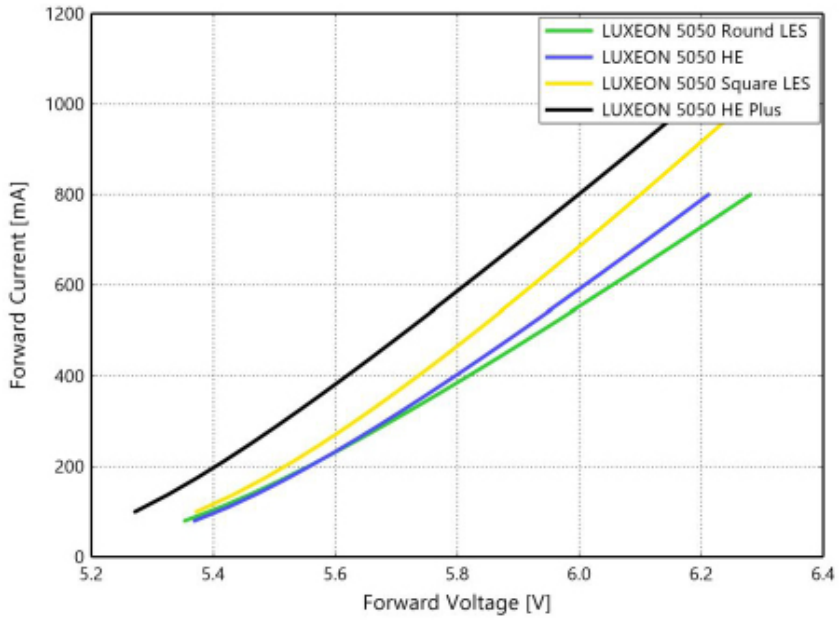


**Figure 4a. Typical forward current vs. forward voltage for LUXEON 5050 Round LES - 6V, LUXEON 5050 HE - 6V, LUXEON 5050 Square LES - 6V and LUXEON 5050 HE Plus - 6V, $T_j$=25°C**

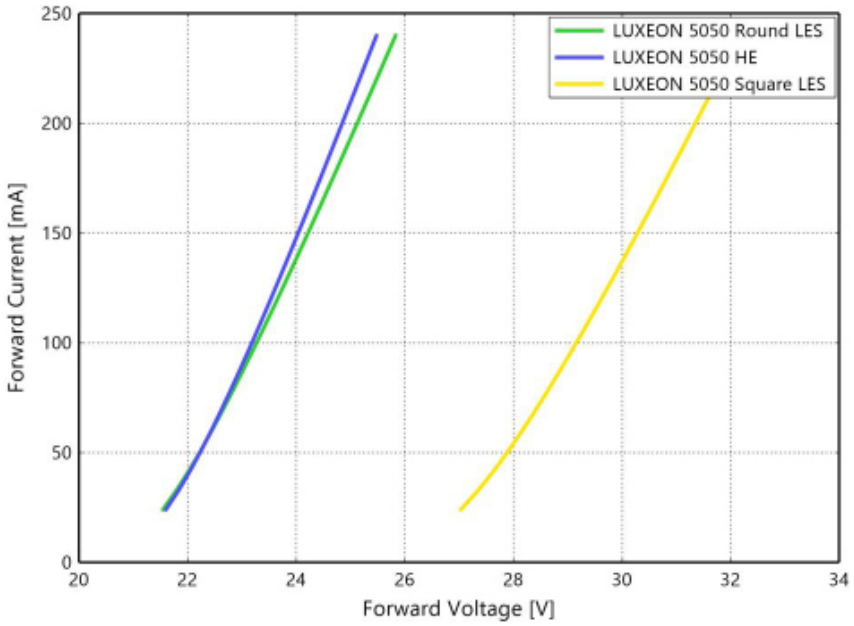


**Figure 4b. Typical forward current vs. forward voltage for LUXEON 5050 Round LES - 24V, LUXEON 5050 HE - 24V, LUXEON 5050 Square LES - 30V, $T_j$=25°C**

## Radiation Pattern Characteristics

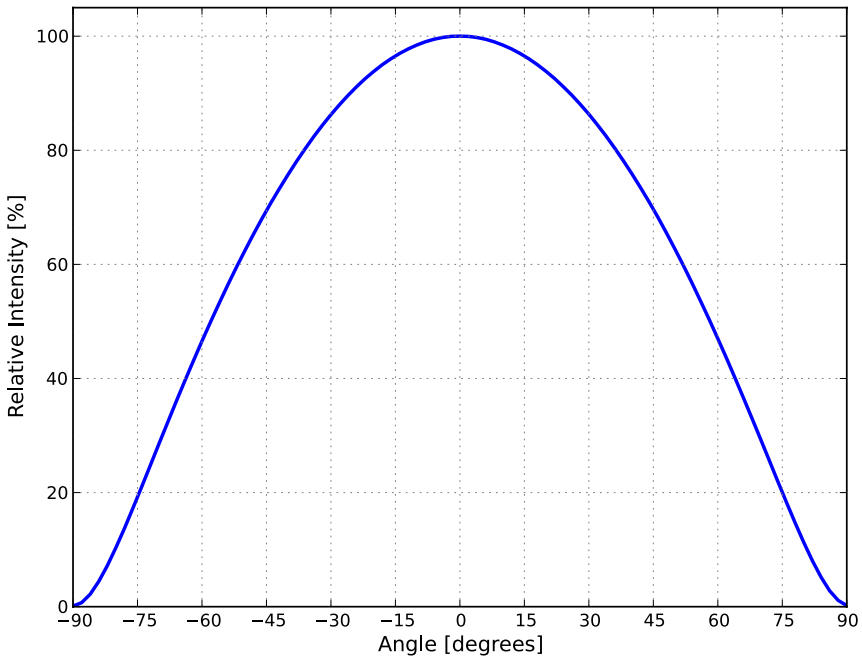


**Figure 5. Typical radiation pattern for all LUXEON 5050s at test current, $T_j$=25°C**

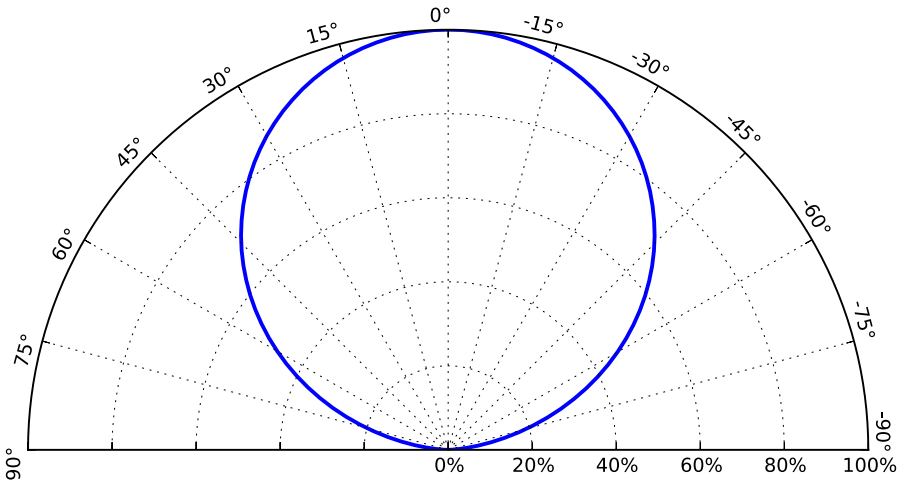


**Figure 6. Typical polar radiation pattern for all LUXEON 5050s at test current, $T_j$=25°C**

# Product Bin and Labeling Definitions

## Decoding Product Bin Labeling

In the manufacturing of semiconductor products, there are variations in performance around the average values given in the technical datasheet. For this reason, Lumileds bins LED components for luminous flux or radiometric power, color point, peak or dominant wavelength and forward voltage.

LUXEON SunPlus 5050 Round LES LEDs are labeled using a 4-digit alphanumeric CAT code following the format below:

**A B C C**

Where:

**A** – designates luminous flux bin (example: L=600 to 650 lm, M=650 to 700 lm)

**B** – designates color bin (example: 3=3 SDCM, 5=5 SDCM parts)

**C C** – designates forward voltage bin (example: A1, A2, B1, B2)

Therefore, a LUXEON SunPlus 5050 Round LES with a lumen range of 600 to 650 lm, color bin of 3 and forward voltage range of 23.5 to 24.2V has the following CAT code:

**L 3 A 1**

LUXEON SunPlus 5050 Square LES LEDs are labeled using a 4-digit alphanumeric CAT code following the format below:

**A B B C**

Where:

**A** – designates luminous flux bin (example: L=600 to 650 lm, M=650 to 700 lm)

**B B** – designates color bin: (example: 83=2700K and 3 SDCM, 35=5000K and 5 SDCM)

**C** – designates forward voltage bin (example: A, B, C, D)

Therefore, a LUXEON SunPlus 5050 Square LES with a lumen range of 600 to 650 lm, color bin of 83 and forward voltage range of 29.0 to 30.0V has the following CAT code:

**L 8 3 A**

 ©2025 Lumileds Holding B.V. All rights reserved. 

## Luminous Flux Bins

Table 5 lists the standard luminous flux bins for LUXEON SunPlus 5050 LEDs. Although several bins are outlined, product availability in a particular bin varies by production run and by product performance. Not all bins are available in all CCTs.

**Table 5a. Luminous flux bin definitions for LUXEON SunPlus 5050 Round LES and Square LES, $T_j$=25°C**

| BIN | LUMINOUS FLUX [1] (lm) | |
|---|---|---|
| | MINIMUM | MAXIMUM |
| G | 400 | 450 |
| H | 450 | 500 |
| J | 500 | 550 |
| K | 550 | 600 |
| L | 600 | 650 |
| M | 650 | 700 |
| N | 700 | 750 |
| P | 750 | 800 |
| Q | 800 | 850 |
| R | 850 | 900 |
| S | 900 | 950 |
| T | 950 | 1000 |

Notes for Table 5a:
1. Lumileds maintains a tolerance of ±7% on luminous flux measurements.

**Table 5b. Luminous flux bin definitions for LUXEON 5050 HE and LUXEON 5050 HE Plus, $T_j$=25°C**

| BIN | LUMINOUS FLUX [1] (lm) | |
|---|---|---|
| | MINIMUM | MAXIMUM |
| B | 425 | 450 |
| C | 450 | 475 |
| D | 475 | 500 |
| E | 500 | 525 |
| F | 525 | 550 |
| G | 550 | 575 |
| H | 575 | 600 |
| J | 600 | 625 |
| K | 625 | 650 |
| L | 650 | 675 |
| M | 675 | 700 |
| N | 700 | 725 |
| P | 725 | 750 |
| Q | 750 | 775 |

Notes for Table 5b:
1. Lumileds maintains a tolerance of ±7% on luminous flux measurements.

 ©2025 Lumileds Holding B.V. All rights reserved. 

# Color Bin Definitions

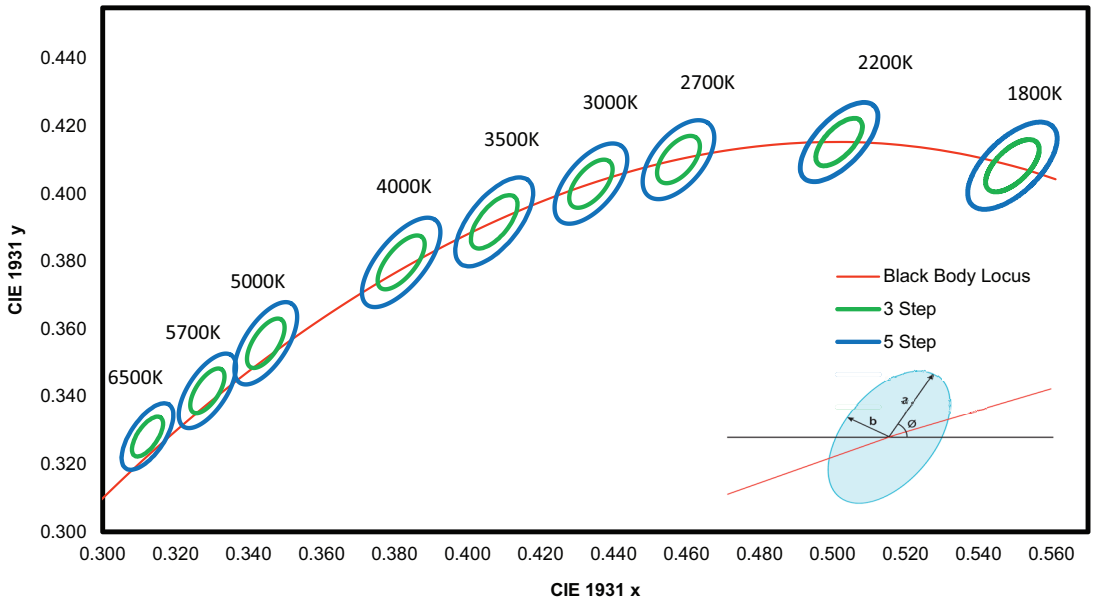


Figure 7. 3- and 5-step MacAdam ellipse illustration for hot-color targeting expected at 85°C

Table 6. 3- and 5-step MacAdam ellipse color bin definitions for LUXEON SunPlus 5050 at test current, hot-color targeted at $T_j$=85°C

| NOMINAL CCT | COLOR SPACE | CENTER POINT [1] (cx, cy) | MAJOR AXIS, a | MINOR AXIS, b | ELLIPSE ROTATION ANGLE, θ | LUXEON 5050 ROUND LES, LUXEON 5050 HE AND 5050 HE PLUS COLOR BIN CODE | LUXEON 5050 SQUARE LES COLOR BIN CODE |
|---|---|---|---|---|---|---|---|
| 1800K | Single 3-step MacAdam ellipse | (0.5493, 0.4083) | 0.00962 | 0.00462 | 47.34° | 3 | B3 |
| 2200K | Single 3-step MacAdam ellipse | (0.5018, 0.4153) | 0.00863 | 0.00398 | 49.27° | 3 | A3 |
| 2700K | Single 3-step MacAdam ellipse | (0.4578, 0.4101) | 0.00810 | 0.00420 | 53.70° | 3 | 83 |
| 3000K | Single 3-step MacAdam ellipse | (0.4338, 0.4030) | 0.00834 | 0.00408 | 53.22° | 3 | 73 |
| 3500K | Single 3-step MacAdam ellipse | (0.4073, 0.3917) | 0.00927 | 0.00414 | 54.00° | 3 | 63 |
| 4000K | Single 3-step MacAdam ellipse | (0.3818, 0.3797) | 0.00939 | 0.00402 | 53.72° | 3 | 53 |
| 5000K | Single 3-step MacAdam ellipse | (0.3447, 0.3558) | 0.00822 | 0.00354 | 59.62° | 3 | 33 |
| 5700K | Single 3-step MacAdam ellipse | (0.3287, 0.3417) | 0.00745 | 0.00320 | 59.09° | 3 | 23 |
| 6500K | Single 3-step MacAdam ellipse | (0.3123, 0.3282) | 0.00669 | 0.00285 | 58.57° | 3 | 13 |
| 1800K | Single 5-step MacAdam ellipse | (0.5493, 0.4083) | 0.00962 | 0.00462 | 47.34° | 5 | B5 |
| 2200K | Single 5-step MacAdam ellipse | (0.5018, 0.4153) | 0.01438 | 0.00663 | 49.27° | 5 | A5 |
| 2700K | Single 5-step MacAdam ellipse | (0.4578, 0.4101) | 0.01350 | 0.00700 | 53.70° | 5 | 85 |
| 3000K | Single 5-step MacAdam ellipse | (0.4338, 0.4030) | 0.01390 | 0.00680 | 53.22° | 5 | 75 |
| 3500K | Single 5-step MacAdam ellipse | (0.4073, 0.3917) | 0.01545 | 0.00690 | 54.00° | 5 | 65 |
| 4000K | Single 5-step MacAdam ellipse | (0.3818, 0.3797) | 0.01565 | 0.00670 | 53.72° | 5 | 55 |
| 5000K | Single 5-step MacAdam ellipse | (0.3447, 0.3558) | 0.01370 | 0.00590 | 59.62° | 5 | 35 |
| 5700K | Single 5-step MacAdam ellipse | (0.3287, 0.3417) | 0.01243 | 0.00533 | 59.09° | 5 | 25 |
| 6500K | Single 5-step MacAdam ellipse | (0.3123, 0.3282) | 0.01115 | 0.00475 | 58.57° | 5 | 15 |

Notes for Table 6:
1. Lumileds maintains a tolerance of ±0.005 on x and y coordinates in the CIE 1931 color space.

# Forward Voltage Bins

**Table 7. Forward voltage bin definitions for LUXEON SunPlus 5050, $T_j$=25°C**

| PART | BIN | FORWARD VOLTAGE [1] ($V_f$) | |
|---|---|---|---|
| | | MINIMUM | MAXIMUM |
| LUXEON 5050 Round LES - 24V | A1 | 23.5 | 24.2 |
| | A2 | 24.2 | 25.0 |
| | B1 | 25.0 | 25.8 |
| | B2 | 25.8 | 26.5 |
| LUXEON 5050 Round LES - 6V | A1 | 5.8 | 6.0 |
| | A2 | 6.0 | 6.2 |
| | B1 | 6.2 | 6.4 |
| | B2 | 6.4 | 6.6 |
| LUXEON 5050 Square LES - 30V | A | 29.0 | 30.0 |
| | B | 30.0 | 31.0 |
| | C | 31.0 | 32.0 |
| LUXEON 5050 Square LES - 6V | A | 5.8 | 6.0 |
| | B | 6.0 | 6.2 |
| | C | 6.2 | 6.4 |
| | D | 6.4 | 6.6 |
| LUXEON 5050 HE - 24V | A0 | 22.7 | 23.5 |
| | A1 | 23.5 | 24.2 |
| | A2 | 24.2 | 25.0 |
| | B1 | 25.0 | 25.8 |
| LUXEON 5050 HE - 6V and LUXEON 5050 HE Plus - 6V | A0 | 5.6 | 5.8 |
| | A1 | 5.8 | 6.0 |
| | A2 | 6.0 | 6.2 |
| | | 6.2 | 6.4 |

Notes for Table 7:
1. Lumileds maintains a tolerance of ±0.1V on forward voltage measurements.

 ©2025 Lumileds Holding B.V. All rights reserved. 

# Mechanical Dimensions

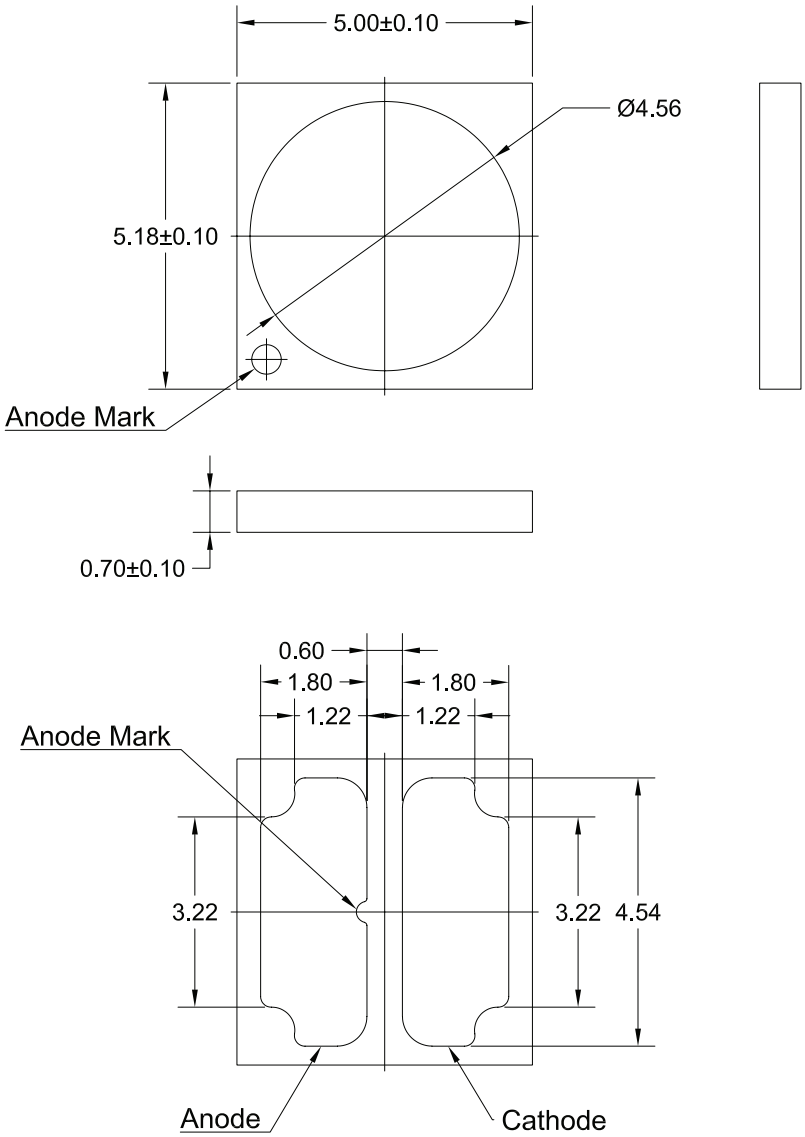


**Figure 8a. Mechanical dimensions for LUXEON SunPlus 5050 Round LES**

Notes for Figure 8a:
1. Drawings are not to scale.
2. All dimensions are in millimeters.

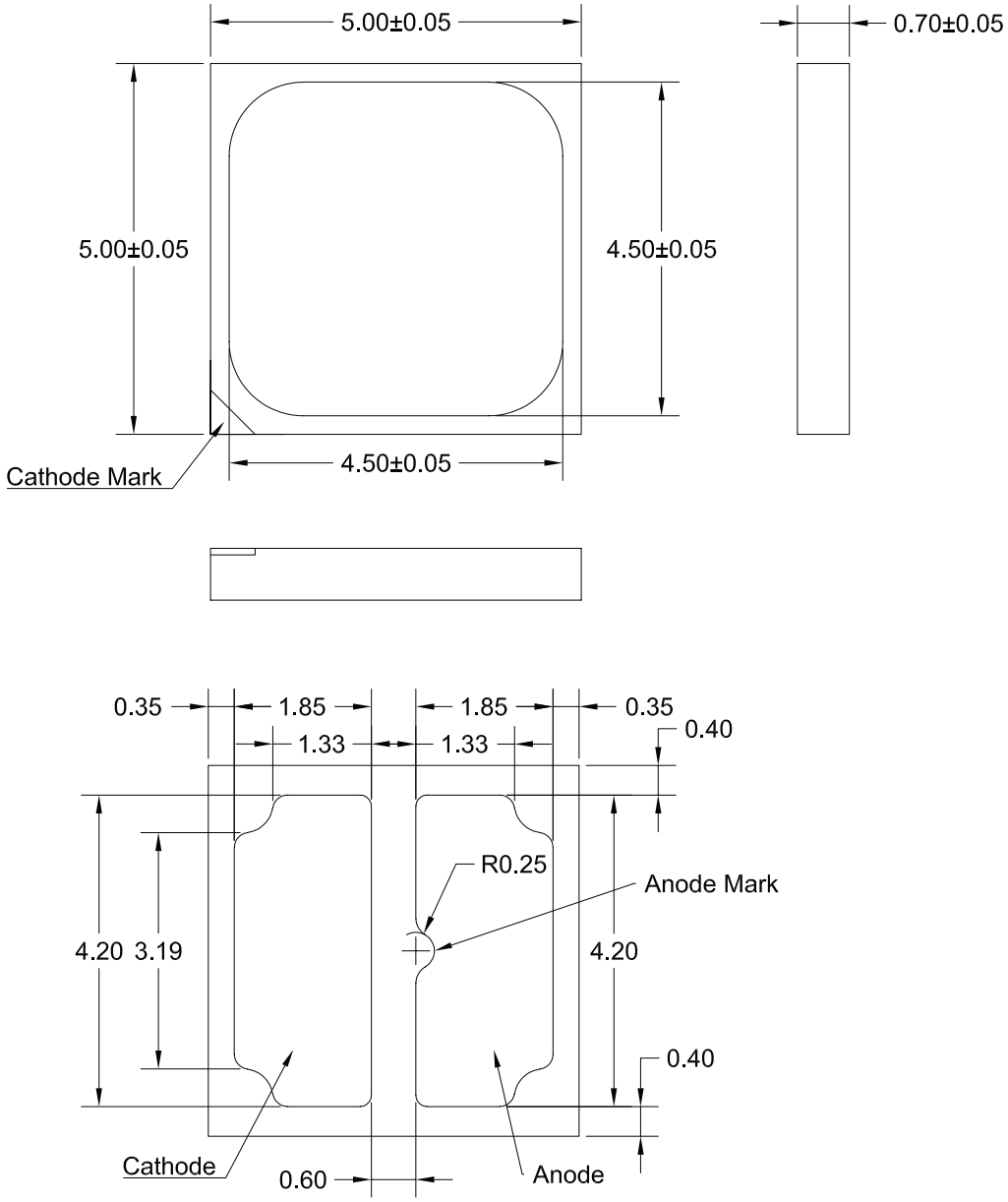


**Figure 8b. Mechanical dimensions for LUXEON SunPlus 5050 Square LES**

Notes for Figure 8b:
1. Drawings are not to scale.
2. All dimensions are in millimeters.

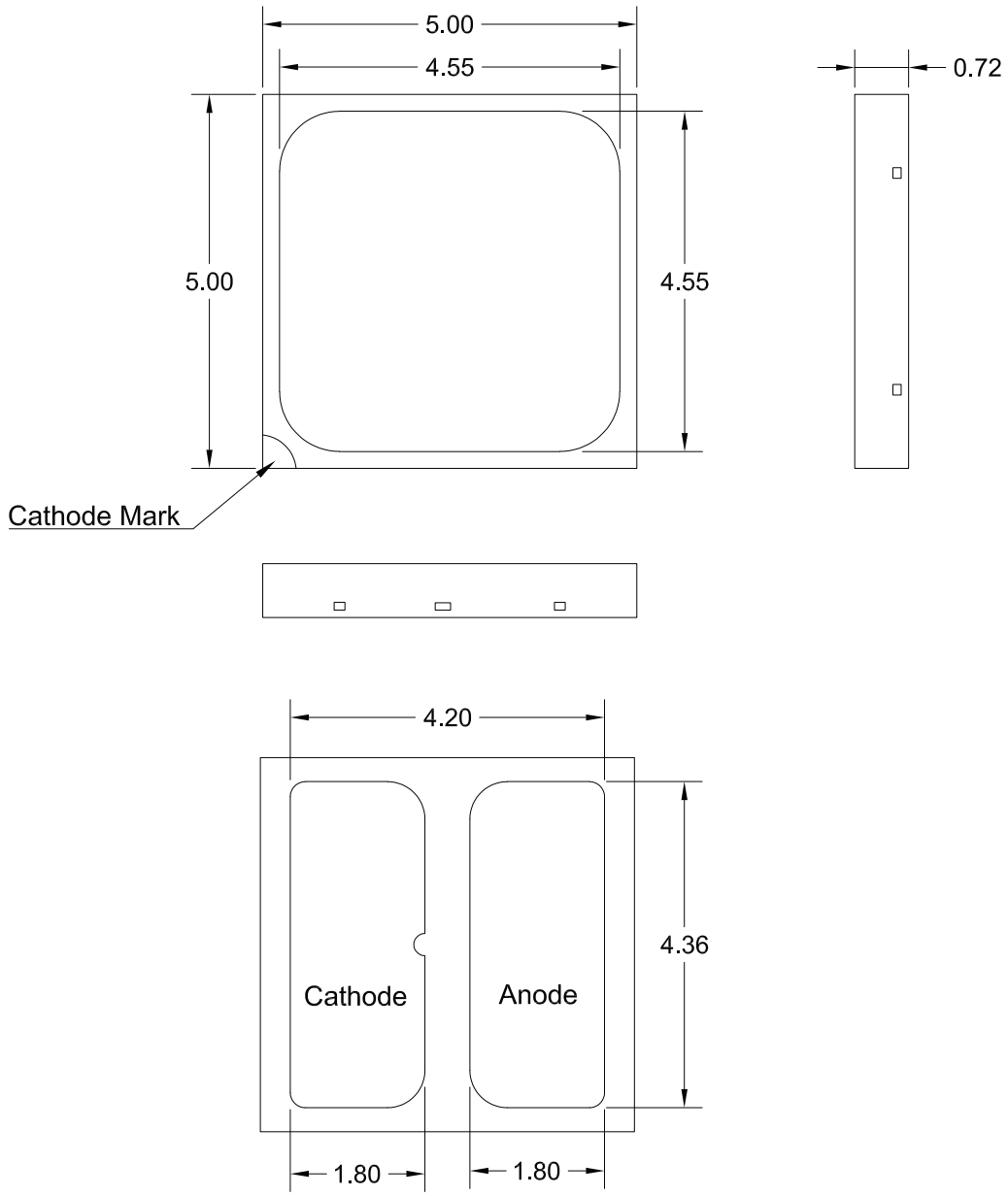


**Figure 8c. Mechanical dimensions for LUXEON 5050 HE and LUXEON 5050 HE Plus**

Notes for Figure 8c:
1. Drawings are not to scale.
2. All dimensions are in millimeters.

# Reflow Soldering Guidelines

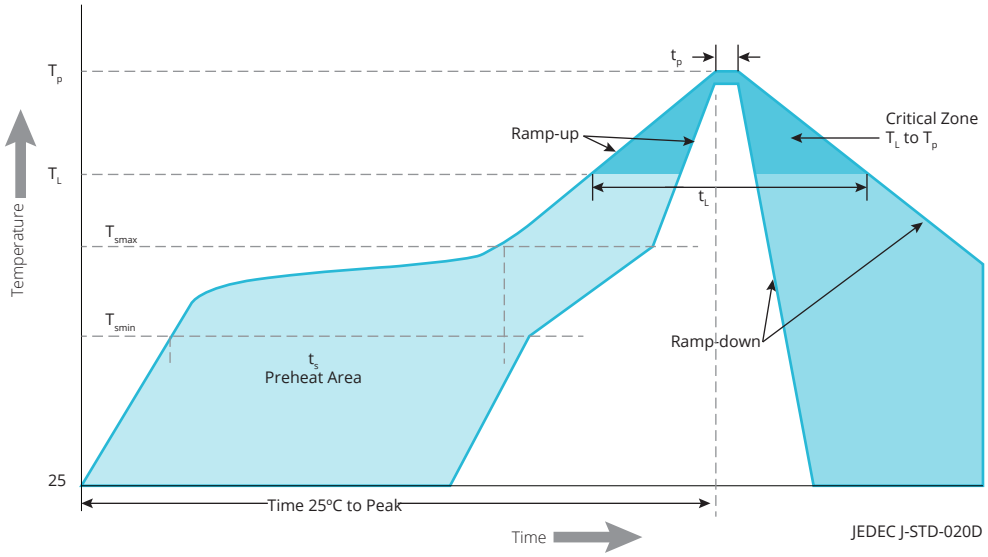


**Figure 9. Visualization of the acceptable reflow temperature profile as specified in Table 8**

**Table 8. Reflow profile characteristics for LUXEON SunPlus 5050**

| PROFILE FEATURE | LEAD-FREE ASSEMBLY |
|---|---|
| Preheat Minimum Temperature ($T_{smin}$) | 150°C |
| Preheat Maximum Temperature ($T_{smax}$) | 200°C |
| Preheat Time ($t_{smin}$ to $t_{smax}$) | 60 to 180 seconds |
| Ramp-Up Rate ($T_L$ to $T_p$) | 3°C / second maximum |
| Liquidous Temperature ($T_L$) | 217°C |
| Time Maintained Above Temperature $T_L$ ($t_L$) | 60 to 150 seconds |
| Peak / Classification Temperature ($T_p$) | 260°C |
| Time Within 5°C of Actual Peak Temperature ($t_p$) | 20 to 40 seconds |
| Ramp-Down Rate ($T_p$ to $T_L$) | 6°C / second maximum |
| Time 25°C to Peak Temperature | 8 minutes maximum |

# JEDEC Moisture Sensitivity

**Table 9. Moisture sensitivity levels for LUXEON SunPlus 5050**

| LEVEL | FLOOR LIFE | | SOAK REQUIREMENTS STANDARD | |
|---|---|---|---|---|
| | TIME | CONDITIONS | TIME | CONDITIONS |
| 3 | 168 Hours | ≤30°C / 60% RH | 192 Hours +5 / -0 | 30°C / 60% RH |

## Solder Pad Design

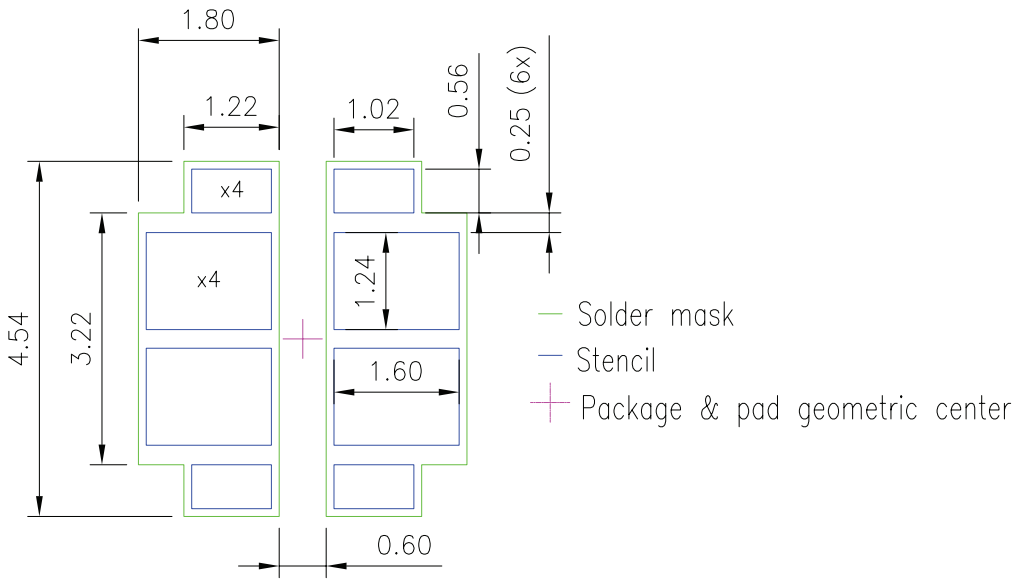


**Figure 10. Optional PCB solder pad layout for LUXEON 5050 Round LES, LUXEON 5050 Square LES, LUXEON 5050 HE and LUXEON 5050 HE Plus**

Notes for Figure 10:
1. Drawings are not to scale.
2. All dimensions are in millimeters.
3. For more details about recommended PCB layout design, please refer to application brief AB174.

# Packaging Information

## Pocket Tape Dimensions

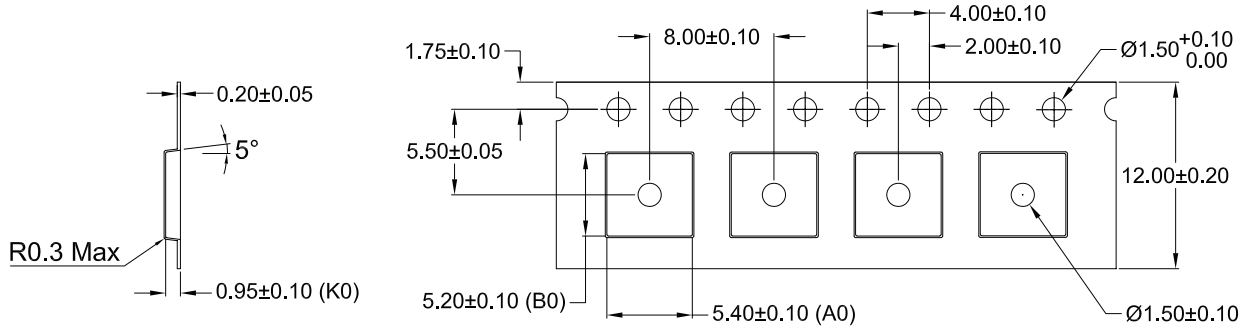


**Figure 11. Pocket Tape dimensions for LUXEON 5050 Round LES, LUXEON 5050 Square LES, LUXEON 5050 HE and LUXEON 5050 HE Plus**

Notes for Figure 11:
1. Drawings are not to scale.
2. All dimensions are in millimeters.

# Reel Dimensions

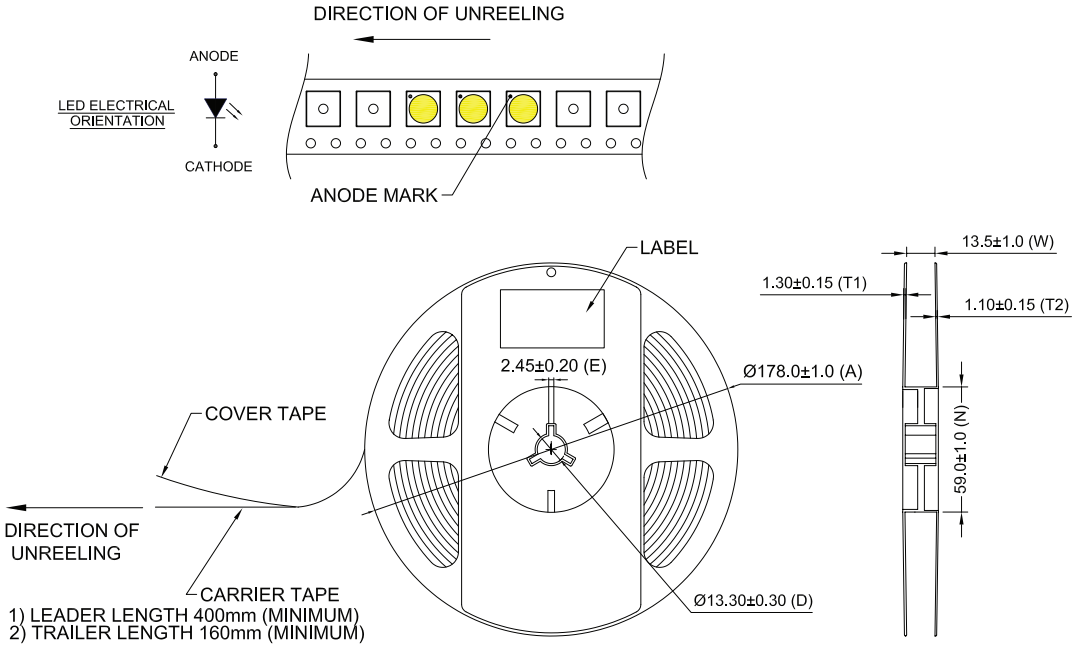


**Figure 12a. Reel dimensions for LUXEON SunPlus 5050 Round LES**

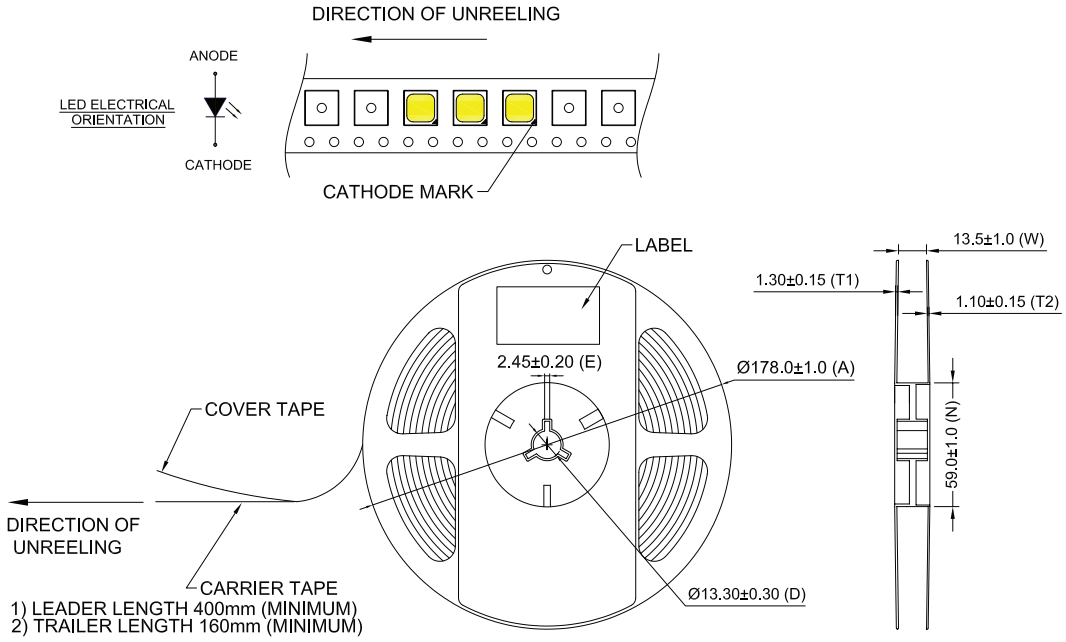


**Figure 12b. Reel dimensions for LUXEON SunPlus 5050 Square LES**

Notes for Figures 12a and 12b:
1. Drawings are not to scale.
2. All dimensions are in millimeters.

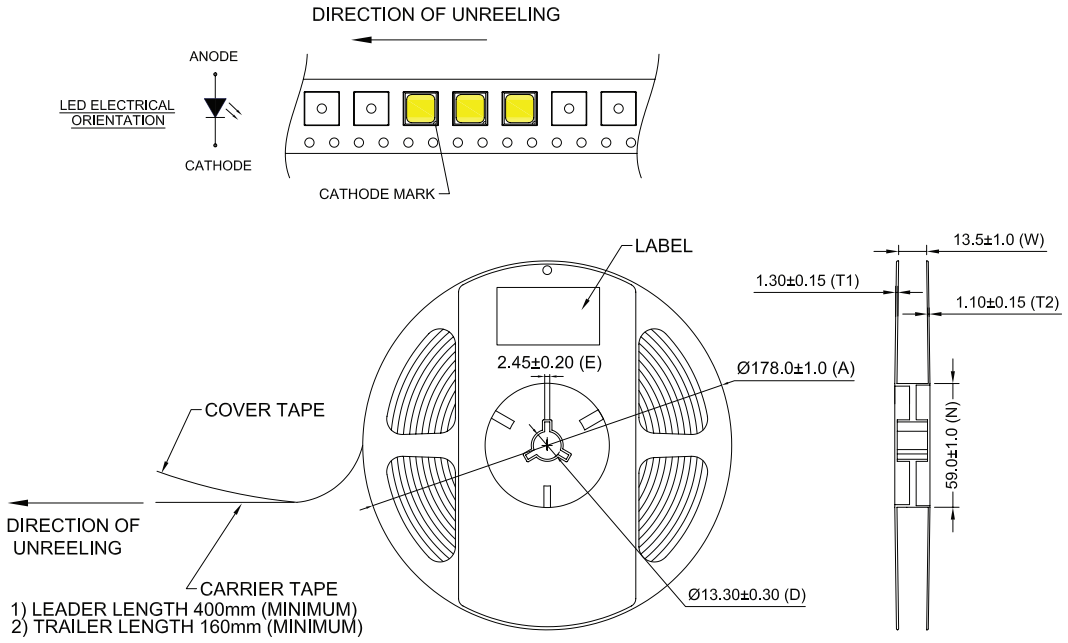


**Figure 12c. Reel dimensions for LUXEON 5050 HE and LUXEON 5050 HE Plus**

Notes for Figure 12c:
1. Drawings are not to scale.
2. All dimensions are in millimeters.

## About Lumileds

Companies developing automotive, mobile, IoT and illumination lighting applications need a partner who can collaborate with them to push the boundaries of light. With over 100 years of inventions and industry firsts, Lumileds is a global lighting solutions company that helps customers around the world deliver differentiated solutions to gain and maintain a competitive edge. As the inventor of Xenon technology, a pioneer in halogen lighting and the leader in high performance LEDs, Lumileds builds innovation, quality and reliability into its technology, products and every customer engagement. Together with its customers, Lumileds is making the world better, safer, more beautiful—with light.

To learn more about our lighting solutions, visit lumileds.com.

LUMILEDS

©2025 Lumileds Holding B.V. All rights reserved.
LUXEON is a registered trademark of the Lumileds Holding B.V. in the United States and other countries.

lumileds.com

Neither Lumileds Holding B.V. nor its affiliates shall be liable for any kind of loss of data or any other damages, direct, indirect or consequential, resulting from the use of the provided information and data. Although Lumileds Holding B.V. and/or its affiliates have attempted to provide the most accurate information and data, the materials and services information and data are provided "as is," and neither Lumileds Holding B.V. nor its affiliates warrants or guarantees the contents and correctness of the provided information and data. Lumileds Holding B.V. and its affiliates reserve the right to make changes without notice. You as user agree to this disclaimer and user agreement with the download or use of the provided materials, information and data. A listing of Lumileds product/patent coverage may be accessed at lumileds.com/patents.

DS415 LUXEON SunPlus 5050
Product Datasheet 20250514